ERREESSE Valve GmbH

TRUNNION

BALL VALVE

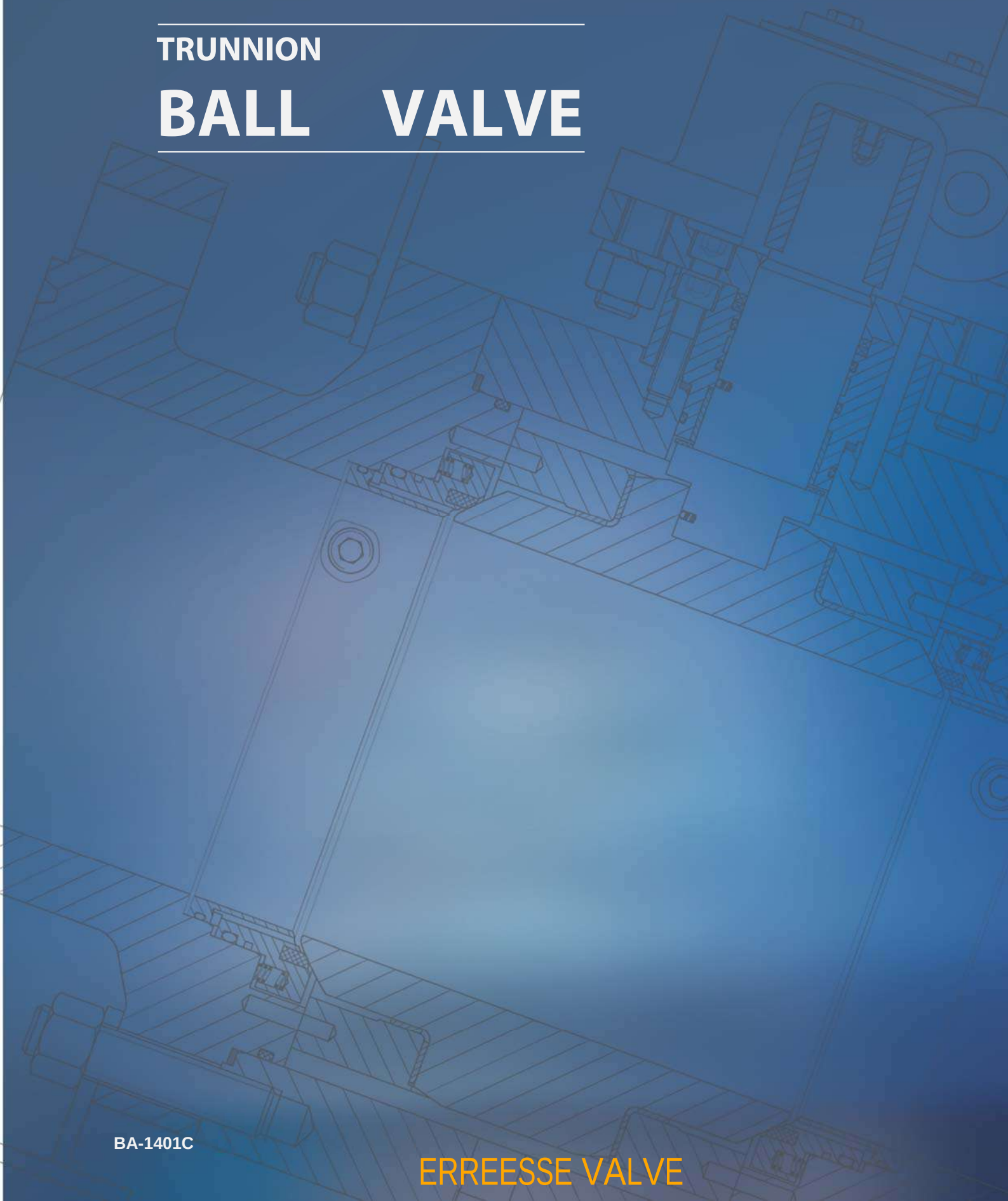

BA-1401C

ERREESSE VALVE

TABLE OF INDEX	*PAGE*

Introduction, *Features*	*1-2*
Scope of Products, *Split Body*	*3*
Scope of Products, *Welded Body*	*4*
Overview, *2-Piece Split Body*	*5*
Overview, *3-Piece Split Body*	*6*
Overview, *Welded Body*	*7*
Dimensions and Weights, *Class 150 (PN 20)*	*8-9*
Dimensions and Weights, *Class 300 (PN 50)*	*10-11*
Dimensions and Weights, *Class 600 (PN 100)*	*12-13*
Dimensions and Weights, *Class 900 (PN 150)*	*14*
Dimensions and Weights, *Class 1500 (PN 250)*	*15*
Dimensions and Weights, *Class 2500 (PN 420)*	*16*
Top Mounting Dimensions and Torque	*17-21*
Gear Operators, *Dimensions and Weights*	*22*
Seat and Seal Material, *Selection Guide*	*23*
Flow Coefficient, *Specification Table*	*24*
Valve Figure Number, *How To Order*	*25-26*

This page is intentionally left blank.

TRUNNION BALL VALVE

INTRODUCTION

A ball valve is a valve with a spherical disc, the part of the valve which controls the flow through it. The sphere has a hole, or port, through the middle so that when the port is in line with both ends of the valve, flow will occur. When the valve is closed, the hole is perpendicular to the ends of the valve, and flow is blocked.

A trunnion ball valve has additional mechanical anchoring of the ball at the top and the bottom, suitable for larger and higher pressure services. To ensure tight sealing at low pressure, high-tensile springs force the seats against the ball while at higher pressure, the medium pressure pushes upstream seat towards the ball.

EMERGENCY SEALS

For trunnion mounted ball valve size NPS 6 (DN 150) and above, it comes with provisions for sealant injection on both the stem and seat while for sizes NPS 5 (DN 125) and below on body cavity. In case of failed underperformed seals, a temporary emergency seal can be achieved by injecting sealants.

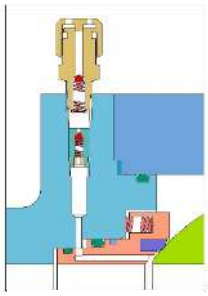

Seat Sealant Valve

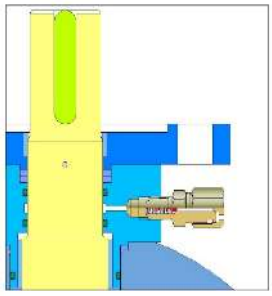

Stem Sealant Valve

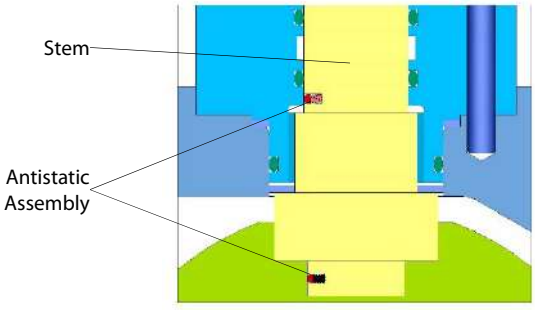

ANTI-STATIC

Because the ball and stem in a ball valve are suspended on non-metallic parts, i.e. the seat seal and stem seal, there is a possibility a static charge may build up on the stem-ball, a mechanical (antistatic metal spring and ball) is introduced in the design to maintain the metal-to-metal contact between the rotating ball/stem and the valve body which will ground any charges to the valve body.

BLOWOUT PROOF STEM

The valve stem is made with a shoulder at the bottom end. It's securely retained by the stuffing box, to avoid that the stem, under certain operating conditions, accidentally blows out. Other designs are available on request.

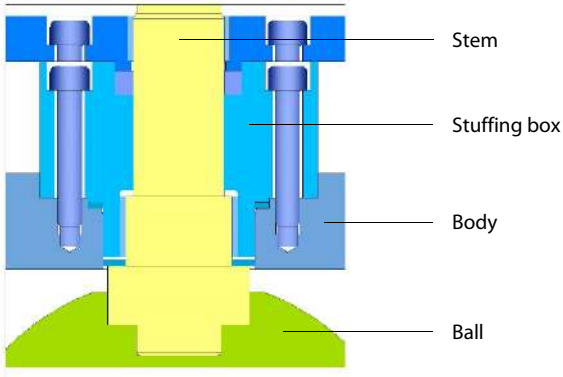

INTRODUCTION (CONT'D) *FEATURES*

SINGLE PISTON EFFECT

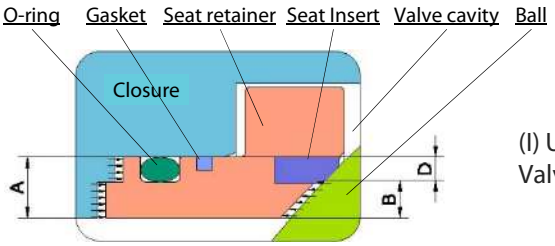

(I) Upstream Valve Seat

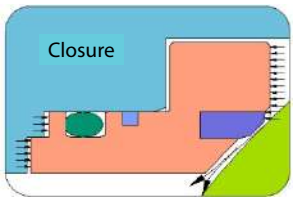

(II) Upstream Valve Seat

The difference in area (D) times the line pressure creates a "piston effect" force which pushes the seat against the ball surface resulting in a tight effect seal.

When the pressure in the valve cavity reaches a level that the total force from cavity acting on the seat is larger than the total force from upstream line pressure, the seat will be pushed away from the ball to relief the valve cavity pressure.

DOUBLE PISTON EFFECT

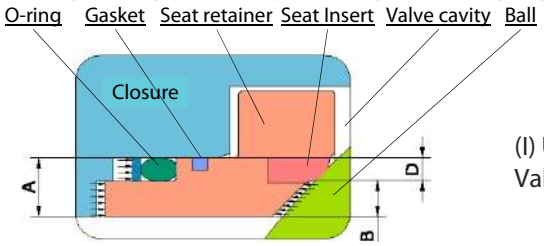

(I) Upstream Valve Seat

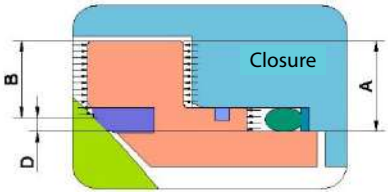

(II) Downstream Valve Seat

The different in area (D) times the line pressure creates a "piston effect" force which pushes the seat against the ball surface resulting in a tight seal.

The difference in the area (D) times the cavity pressure creates a "piston effect" force which pushes the seat against the ball surface resulting in a tight seal.

FIRE SAFE DESIGN

During a fire, non-metallic soft material will be burnt, subsequently seat leakage or external leakage may occur and cause the fire spread or contaminate the environment. Our ball valves are fire tested in accordance with API 6FA or API 607, witnessed and certified by TUV SUD. If valve is not covered according to the standards, they are designed to be fire safe.

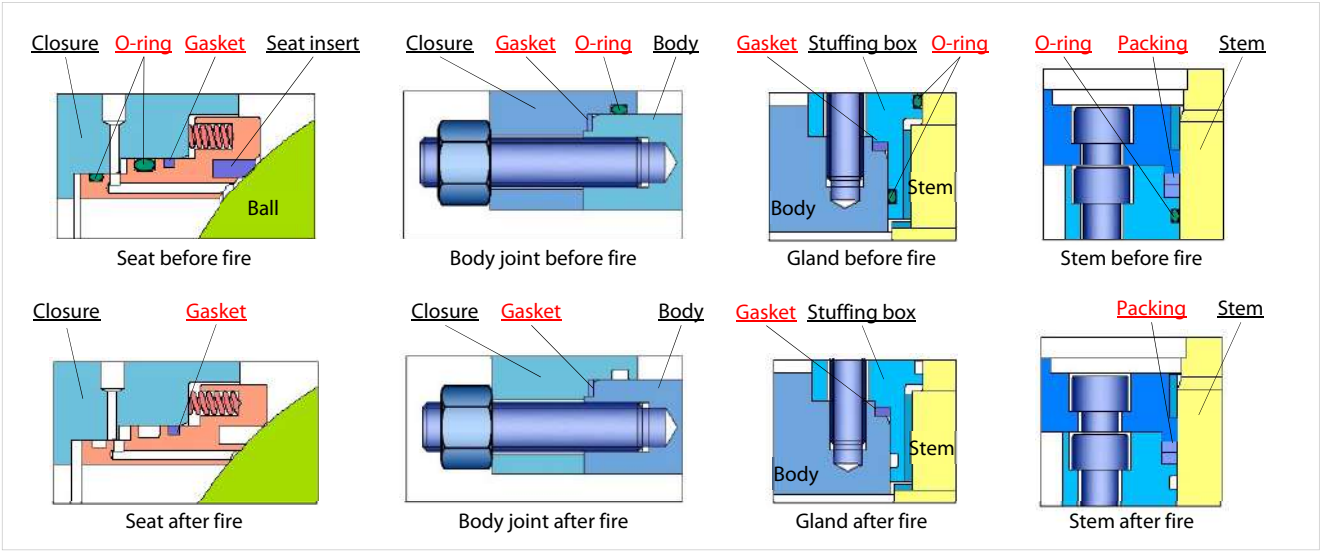

SCOPE OF PRODUCTS

SPLIT BODY

Legends:
A – Available in Casting and Forging
B – Available in Casting Only
C – Available Forging Only
D – Not Usually Required
E – Casting Not Recommended
N – Not Available

Size in/mm	Class 150 PN 20	Class 300 PN 50	Class 600 PN 100	Class 900 PN 150	Class 1500 PN 250	Class 2500 PN 420
½ *15*	N	N	N	N	N	N
¾ *20*	N	N	N	N	N	N
1 *25*	N	N	N	N	N	N
1 ½ *40*	A, D	A, D	A, D	A, D	A, D	C
2 *50*	A	A	A	A, E	A, E	C
3 *65*	A	A	A	A, E	A, E	C
4 *80*	A	A	A	A, E	A, E	C
5 *100*	A, D	A, D	A, D	A, D	A, D, E	C
6 *150*	A	A	A	A, E	A, E	C
8 *200*	A	A	A	A, E	A, E	C
10 *250*	A	A	A	A, E	A, E	C
12 *300*	A	A	A	A, E	A, E	C
14 *350*	A	A	A	A, E	A, E	C
16 *400*	A	A	A	A, E	A, E	C
18 *450*	A	A	A	A, E	A, E	C
20 *500*	A	A	A	A, E	A, E	C
22 *550*	A	A	A	A, E	A, E	N
24 *600*	A	A	A	A, E	A, E	N
26 *650*	A	A	A	A, E	B, E	N
28 *700*	A	A	A	A, E	B, E	N
30 *750*	A	A	A	A, E	B, E	N
32 *800*	A	A	A	B, E	B, E	N
34 *850*	A	A	A	B, E	B, E	N
36 *900*	A	A	A	B, E	B, E	N
38 *950*	A, E	A, E	A	B, E	B, E	N
40 *1000*	A, E	A, E	A	B, E	B, E	N
42 *1050*	A, E	A, E	A	B, E	B, E	N
48 *1200*	A, E	A, E	A	B, E	B, E	N
56 *1400*	A, E	A, E	A	N	N	N

SCOPE OF PRODUCTS

WELDED BODY

Legends:
A – Available in Casting and Forging
B – Available in Casting Only
C – Available Forging Only
D – Not Usually Required
E – Casting Not Recommended
N – Not Available

Size in/mm	Class 150 PN 20	Class 300 PN 50	Class 600 PN 100	Class 900 PN 150	Class 1500 PN 250	Class 2500 PN 420
½ *15*	N	N	N	N	N	N
¾ *20*	N	N	N	N	N	N
1 *25*	N	N	N	N	N	N
1 ½ *40*	C, D	C, D	C, D	C, D	C, D	C, D
2 *50*	C	C	C	C	C	C
3 *65*	C	C	C	C	C	C
4 *80*	C	C	C	C	C	C
5 *100*	C, D	C, D	C, D	C, D	C, D	C, D
6 *150*	C	C	C	C	C	C
8 *200*	C	C	C	C	C	C
10 *250*	C	C	C	C	C	C
12 *300*	C	C	C	C	C	C
14 *350*	C	C	C	C	C	C
16 *400*	C	C	C	C	C	C
18 *450*	C	C	C	C	C	C
20 *500*	C	C	C	C	C	C
22 *550*	C	C	C	C	C	N
24 *600*	C	C	C	C	C	N
26 *650*	C	C	C	C	N	N
28 *700*	C	C	C	C	N	N
30 *750*	C	C	C	C	N	N
32 *800*	C	C	C	N	N	N
34 *850*	C	C	C	N	N	N
36 *900*	C	C	C	N	N	N
38 *950*	C, D	C, D	C, D	N	N	N
40 *1000*	C	C	C	N	N	N
42 *1050*	C	C	C	N	N	N
48 *1200*	C	C	C	N	N	N
56 *1400*	C	C	C	N	N	N

TRUNNION BALL VALVE

OVERVIEW

2-PIECE SPLIT BODY

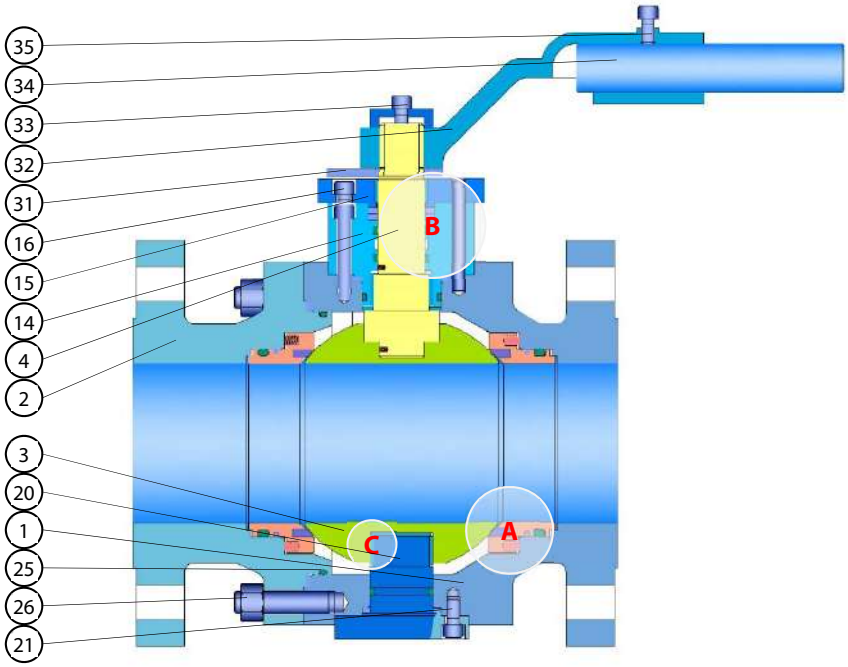

Forging Steel

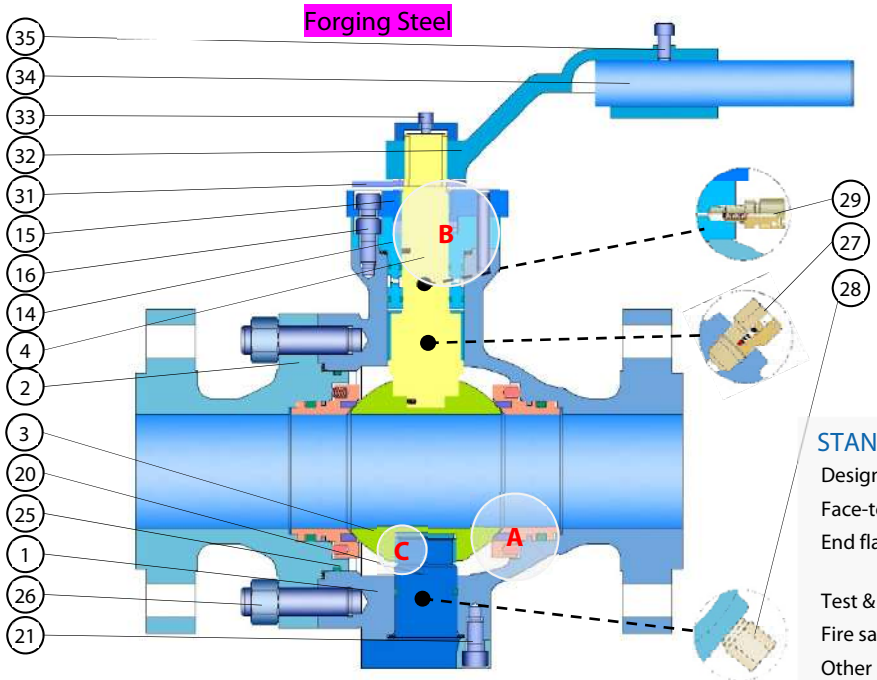

Casting Steel

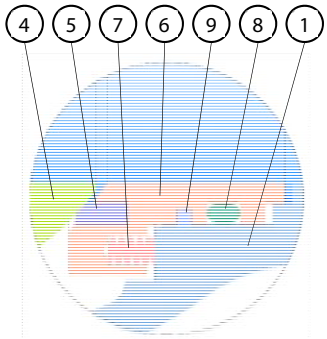

A

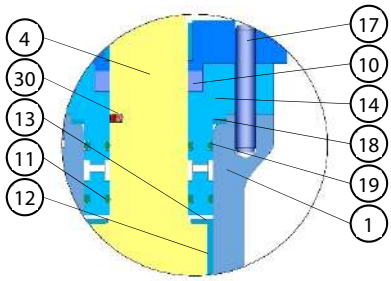

B

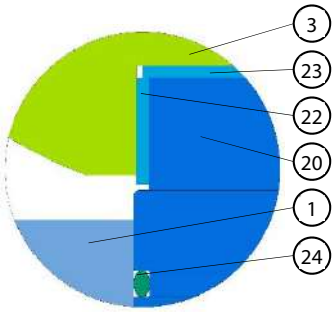

C

STANDARDS

Design & manufacture	API 6D, ISO 14313, ISO 17292
Face-to-face	API 6D, ASME B16.10
End flanges	ASME B16.5, ASME B16.47 MSS SP-44 (NPS 22 Only)
Test & inspection	API 6D, API 598
Fire safe	API 6FA, API 607
Other	NACE MR 01-75, MR 0103 ISO 15848, API 622, API 624

PART LIST

1	Body	13	Thrust washer	25	Body seal
2	Closures	14	Stuffing box	26	Stud bolt & nut
3	Ball	15	Gland cover	27	Vent valve
4	Stem	16	Gland socket bolt	28	Drain plug
5	Seat insert	17	Gland pin	29	Stem sealant valve
6	Seat retainer	18	Gland seal	30	Antistatic assembly
7	Seat spring	19	Gland O-ring	31	Stopper
8	Seat O-ring	20	Trunion	32	Lever
9	Seat seal	21	Trunnion socket bolt	33	Lever lock screw
10	Stem packing	22	Trunnion bushing	34	Extension pipe
11	Stem O-ring	23	Trunnion thrust washer	35	Pipe lock screw
12	Stem bushing	24	Trunnion O-ring		

TYPICAL MATERIALS

Body/Closures	A105, A182 F304, F304L, F316, F316L, F51, F53, A350 LF2, LF3, LF5, Monel, Inconel, Hastelloy (Forging) A216 WCB, A351 CF3, CF8, CF3M, CF8M, A995 4A, 5A, A352 LCB, LCC, LC2 (Casting)
Ball	CS+ENP, A182 F304, F304L, F316, F316L, F51, F53, CS+TCC, CS+Ni60
Seat retainer	CS+ENP, A182 F304, F304L, F316, F316L, F51, F53, CS+TCC, CS+Ni55
Seat insert	PTFE, RPTFE, Nylon, Devlon, PEEK
Stem	A182 F6a, F316, F51, A105+ENP, AISI 4140+ENP, 17-4PH
Packing	Graphite, PTFE, RPTFE
O-ring	Viton, NBR, HNBR, AFLAS

ERREESSE VALVE

OVERVIEW

3-PIECE SPLIT BODY

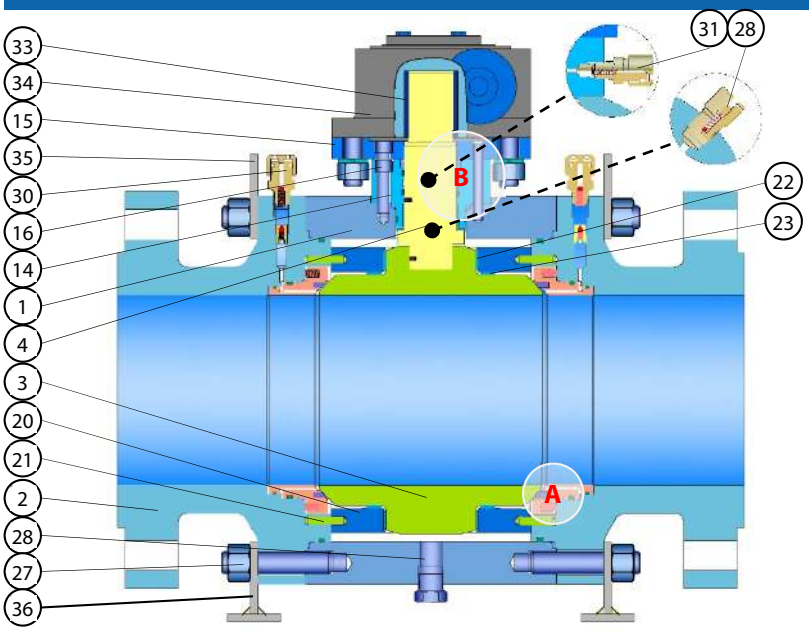

Forging Steel

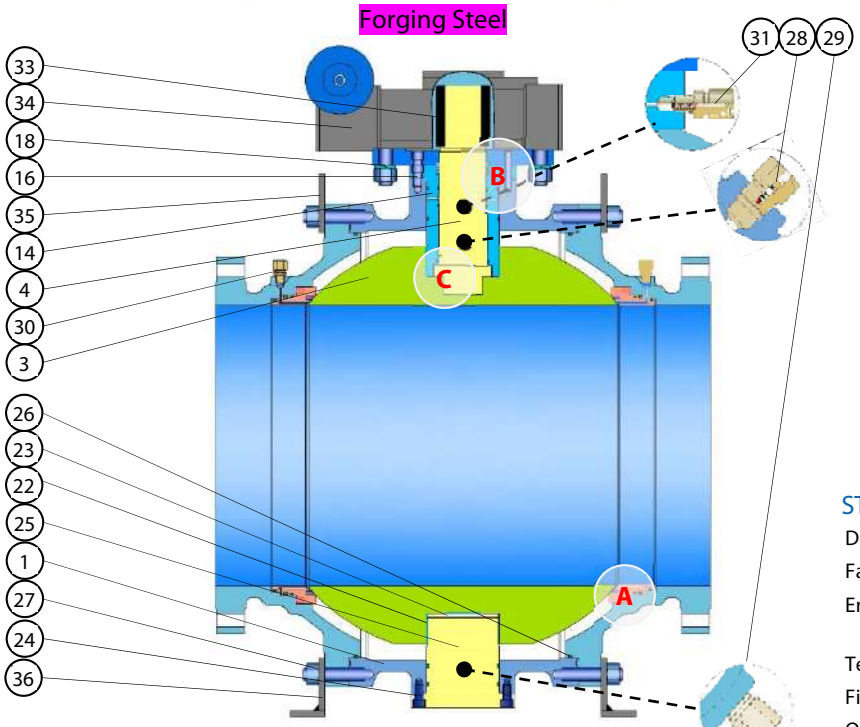

Casting Steel

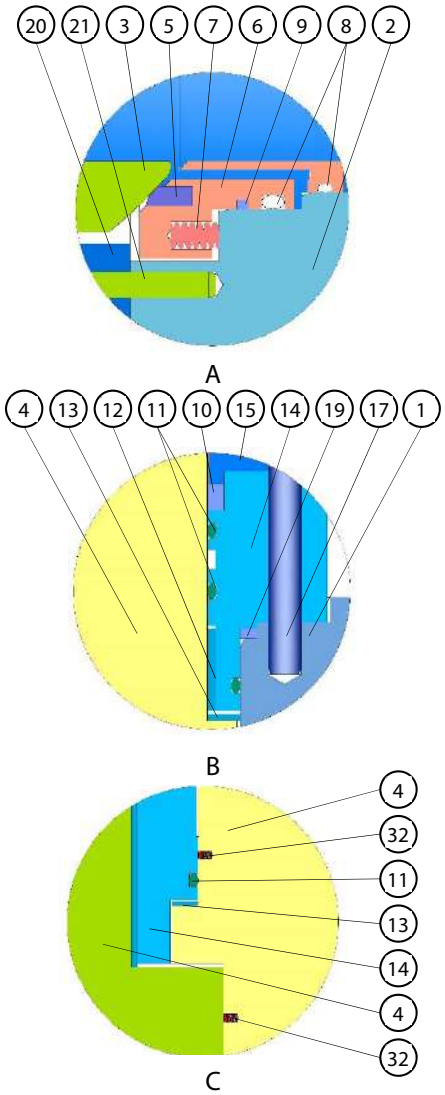

STANDARDS

Design & manufacture	API 6D, ISO 14313, ISO 17292
Face-to-face	API 6D, ASME B16.10
End flanges	ASME B16.5, ASME B16.47 MSS SP-44 (NPS 22 Only)
Test & inspection	API 6D, API 598
Fire safe	API 6FA, API 607
Other	NACE MR 01-75, MR 0103 ISO 15848, API 622, API 624

PART LIST

1. Body
2. Closures
3. Ball
4. Stem
5. Seat insert
6. Seat retainer
7. Seat spring
8. Seat O-ring
9. Seat seal
10. Stem packing
11. Stem O-ring
12. Stem bushing
13. Thrust washer
14. Stuffing box
15. Gland cover
16. Gland socket bolt
17. Gland pin
18. Gland bolt & nut
19. Gland seal
20. Trunnion support
21. Trunnion support pin
22. Bushing
23. Thrust washer
24. Trunnion socket bolt
25. Trunnion
26. Body seal
27. Stud bolt & nut
28. Vent valve
29. Drain plug
30. Seat sealant valve
31. Stem sealant valve
32. Antistatic assembly
33. Drive key
34. Gearbox assembly
35. Lifting lug
36. Supporting leg

TYPICAL MATERIALS

Body/Closures	A105, A182 F304, F304L, F316, F316L, F51, F53, A350 LF2, LF3, LF5, Monel, Inconel, Hastelloy (Forging) A216 WCB, A351 CF3, CF8, CF3M, CF8M, A995 4A, 5A, A352 LCB, LCC, LC2 (Casting)
Ball	CS+ENP, A182 F304, F304L, F316, F316L, F51, F53, CS+TCC, CS+Ni60
Seat retainer	CS+ENP, A182 F304, F304L, F316, F316L, F51, F53, CS+TCC, CS+Ni55
Seat insert	PTFE, RPTFE, Nylon, Devlon, PEEK
Stem	A182 F6a, F316, F51, A105+ENP, AISI 4140+ENP, 17-4PH
Packing	Graphite, PTFE, RPTFE
O-ring	Viton, NBR, HNBR, AFLAS

OVERVIEW

WELDED BODY

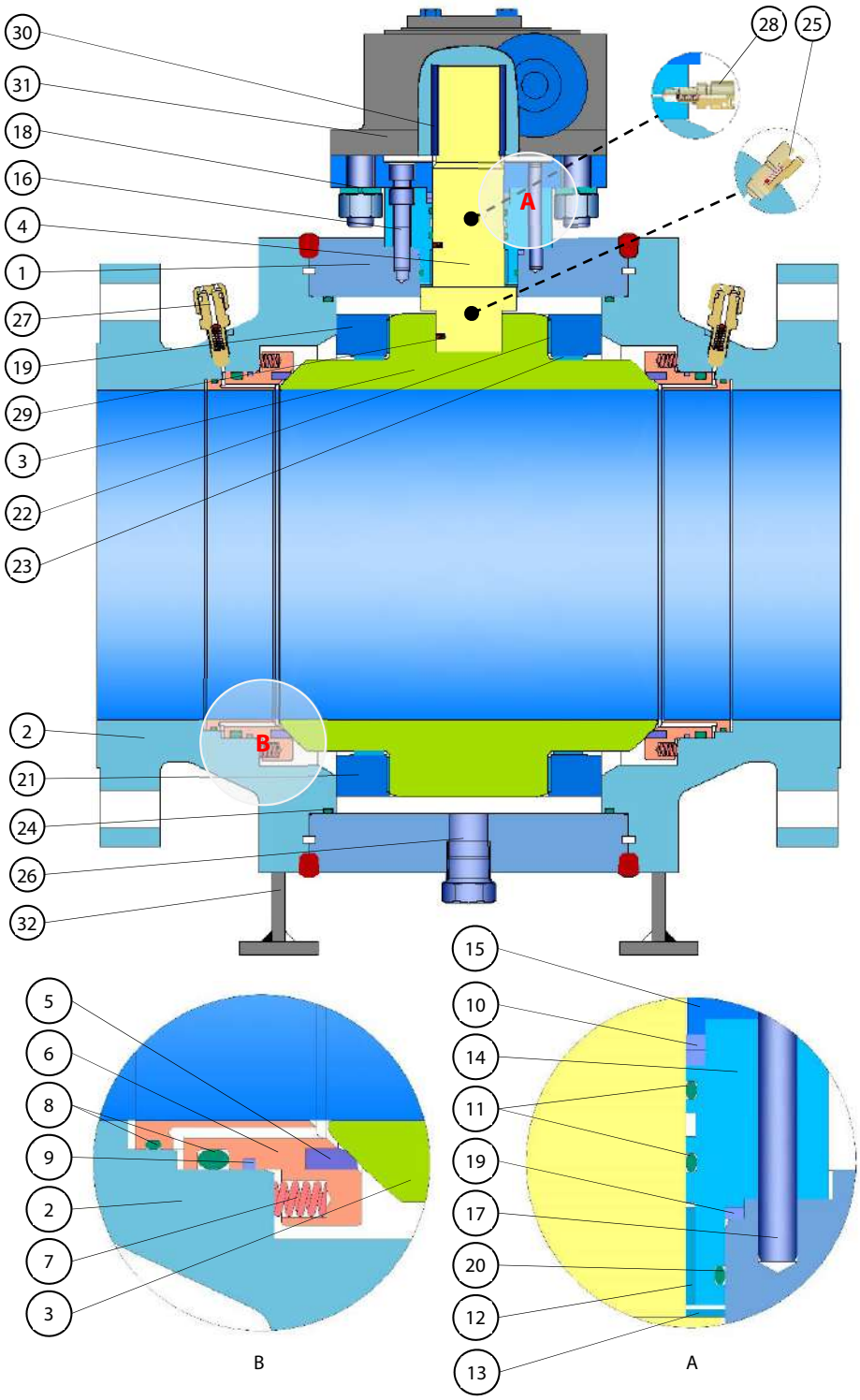

PART LIST

1. Body
2. Closures
3. Ball
4. Stem
5. Seat Insert
6. Seat retainer
7. Seat spring
8. Seat O-ring
9. Seat seal
10. Stem packing
11. Stem O-ring
12. Stem bushing
13. Thrust washer
14. Stuffing box
15. Gland cover
16. Gland socket bolt
17. Gland pin
18. Gland bolt & nut
19. Gland seal
20. Gland O-ring
21. Trunnion support
22. Trunnion support bushing
23. Trunnion support thrust washer
24. Body seal
25. Vent valve
26. Drain plug
27. Seat sealant valve
28. Stem sealant valve
29. Antistatic assembly
30. Drive key
31. Gearbox assembly
32. Supporting leg

TYPICAL MATERIALS

Body/Closures	A105, A182 F304, F304L, F316, F316L, F51, F53 A350 LF2, LF3, LF5, Monel, Inconel, Hastelloy (Forging only)
Ball	CS+ENP, A182 F304, F304L, F316, F316L, F51, F53 CS+TCC, CS+Ni60
Seat retainer	CS+ENP, A182 F304, F304L, F316, F316L, F51, F53 CS+TCC, CS+Ni55
Seat insert	PTFE, RPTFE, Nylon, Devlon, PEEK
Stem	A182 F6a, F316, F51, A105+ENP, AISI 4140+ENP, 17-4PH
Packing	Graphite, PTFE, RPTFE
O-ring	Viton, NBR, HNBR, AFLAS

STANDARDS

Design & manufacture	API 6D, ISO 14313, ISO 17292
Face-to-face	API 6D, ASME B16.10
End flanges	ASME B16.5, ASME B16.47 MSS SP-44 (NPS 22 Only)
Test & inspection	API 6D, API 598
Fire safe	API 6FA, API 607
Other	NACE MR 01-75, MR 0103 ISO 15848, API 622, API 624

DIMENSIONS AND WEIGHTS

ASME CLASS 150 (PN 20)

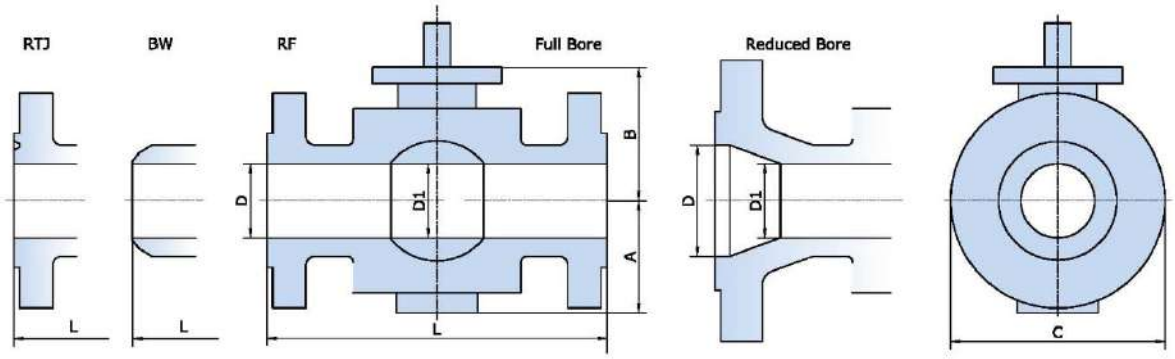

ASME CLASS 150 (PN 20) FULL BORE

Size *in/mm*	D	D1	L			Casting			Forging			Weight	
			RF	RTJ	BW	A	B	C	A	B	C	RF/RTJ *(lb/kg)*	BW *(lb/kg)*
2	1.93	1.93	7	7.5	8.5	3.4	5.3	5.9	3.1	4.6	5.9	40	35
50	*49*	*49*	*178*	*191*	*216*	*86*	*135*	*150*	*79*	*117*	*150*	*18*	*16*
2 ½	2.44	2.44	7.5	8	9.5	3.9	5.9	7.3	3.6	5.7	7.1	62	55
65	*62*	*62*	*191*	*203*	*241*	*100*	*150*	*185*	*92*	*145*	*180*	*28*	*25*
3	2.91	2.91	8	8.5	11	4.9	6.3	7.8	4	5.6	7.7	73	66
80	*74*	*74*	*203*	*216*	*283*	*125*	*161*	*198*	*102*	*141*	*195*	*33*	*30*
4	3.94	3.94	9	9.5	12	5.2	7.5	9	4.8	6.7	9	110	99
100	*100*	*100*	*229*	*242*	*305*	*132*	*190*	*230*	*123*	*170*	*230*	*50*	*45*
5	5	5	14	14.53	14	6.1	8.1	11.2	5.9	7.9	11	238	224
125	*127*	*127*	*356*	*369*	*356*	*155*	*205*	*285*	*150*	*200*	*280*	*108*	*102*
6	5.91	5.91	15.5	16	18	7.2	9.2	12.6	6.6	8.7	12.1	286	271
150	*150*	*150*	*394*	*407*	*457*	*184*	*233*	*320*	*168*	*222*	*308*	*130*	*123*
8	7.91	7.91	18	18.5	20.5	9	10	15.7	9	10	15.3	506	484
200	*201*	*201*	*457*	*470*	*521*	*228*	*253*	*398*	*230*	*255*	*388*	*230*	*220*
10	9.92	9.92	21	21.5	22	10.6	11.4	19.1	11.2	11.8	18.7	847	770
250	*252*	*252*	*533*	*546*	*559*	*268*	*290*	*485*	*285*	*300*	*475*	*385*	*350*
12	11.94	11.94	24	24.5	25	12.9	15.6	22.2	13.4	14.4	21.4	1,342	1232
300	*303*	*303*	*610*	*623*	*635*	*327*	*395*	*565*	*340*	*340*	*543*	*610*	*560*
14	13.15	13.15	27	27.5	30	14.8	15.6	14	14.2	15	23.5	1760	1703
350	*334*	*334*	*686*	*699*	*762*	*375*	*395*	*610*	*360*	*381*	*598*	*800*	*774*
16	15.16	15.16	30	30.5	33	16	17.8	27.9	15.7	16.5	26.7	2640	2420
400	*385*	*385*	*762*	*775*	*838*	*405*	*452*	*708*	*400*	*419*	*678*	*1200*	*1100*
18	17.17	17.17	34	34.5	36	18.3	18.5	30.1	18.1	18.5	29.9	3388	3124
450	*436*	*436*	*864*	*877*	*914*	*465*	*470*	*765*	*460*	*470*	*760*	*1540*	*1420*
20	19.17	19.17	36	36.5	39	21.7	21.7	34.3	19.3	19.9	33.1	4048	3850
500	*487*	*487*	*914*	*927*	*991*	*550*	*550*	*870*	*490*	*505*	*840*	*1840*	*1750*
22	21.19	21.19	39	39.5	43	19.1	19.1	37	18.9	21.5	36.8	4928	4774
550	*538*	*538*	*991*	*1003*	*1092*	*485*	*550*	*940*	*480*	*545*	*935*	*2240*	*2170*
24	23.19	23.19	42	42.5	46	24	24.1	40.4	23.6	23.9	39.8	6820	6006
600	*589*	*589*	*1067*	*1080*	*1143*	*610*	*612*	*1026*	*600*	*607*	*1010*	*3100*	*2730*
26	24.94	24.94	45	(1)	49	24.8	26	43.7	24.5	25.6	42.5	8030	7524
650	*633*	*633*	*1143*		*1245*	*630*	*660*	*1110*	*623*	*651*	*1080*	*3650*	*3420*
28	26.94	26.94	49	(1)	53	27	28	46.3	26.8	27.2	45.6	9636	9064
700	*684*	*684*	*1245*		*1346*	*685*	*700*	*1175*	*680*	*690*	*1157*	*4380*	*4120*
30	28.94	28.94	51	(1)	55	28	30.6	49.8	29	29	48.8	11814	10780
750	*735*	*735*	*1295*		*1397*	*710*	*777*	*1265*	*737*	*737*	*1240*	*5370*	*4900*
32	30.69	30.69	54	(1)	60	30.3	30.7	45.1	30.1	30.5	52.6	13310	12716
800	*779*	*779*	*1372*		*1524*	*770*	*780*	*1145*	*765*	*775*	*1335*	*6050*	5780
34	32.69	32.69	58	(1)	64	31.3	30.9	45.3	30.7	30.3	44.5	15180	14146
850	*830*	*830*	*1473*		*1626*	*795*	*785*	*1150*	*780*	*770*	*1130*	*6900*	*6430*
36	34.41	34.41	60	(1)	68	35.6	34.4	58.3	33.5	33.5	57.8	18920	16720
900	*874*	*874*	*1524*		*1727*	*905*	*875*	*1480*	*850*	*852*	*1468*	*8600*	*7600*
40	38.44	38.44	70.87	(1)	70.87	37	37	66.9	36.6	36.6	64.2	24200	21340
1000	*976*	*976*	*1800*		*1800*	*940*	*940*	*1700*	*930*	*930*	*1630*	*11000*	*9700*
42	40.19	40.19	74.8	(1)	74.8	38.4	38.4	66.9	37.4	37.94	66.5	31900	24816
1050	*1010*	*1010*	*1900*		*1900*	*975*	*975*	*1700*	*950*	*950*	*1690*	*14500*	*11280*
48	45.94	45.94	82.68	(1)	82.68	42.7	45.3	76.4	42.3	43.3	76	39600	35420
1200	*1166*	*1166*	*2100*		*2100*	*1085*	*1150*	*1940*	*1075*	*1100*	*1930*	*18000*	*16100*
56	53.56	53.56	94.49	(1)	94.49	50.4	51.6	90.2	50	51.6	89.6	61600	55660
1400	*1360*	*1360*	*2400*		*2400*	*1280*	*1310*	*2290*	*1270*	*1310*	*2275*	*28000*	*25300*

(1) Contact our sales representative for more information.

DIMENSIONS AND WEIGHTS

ASME CLASS 150 (PN 20)

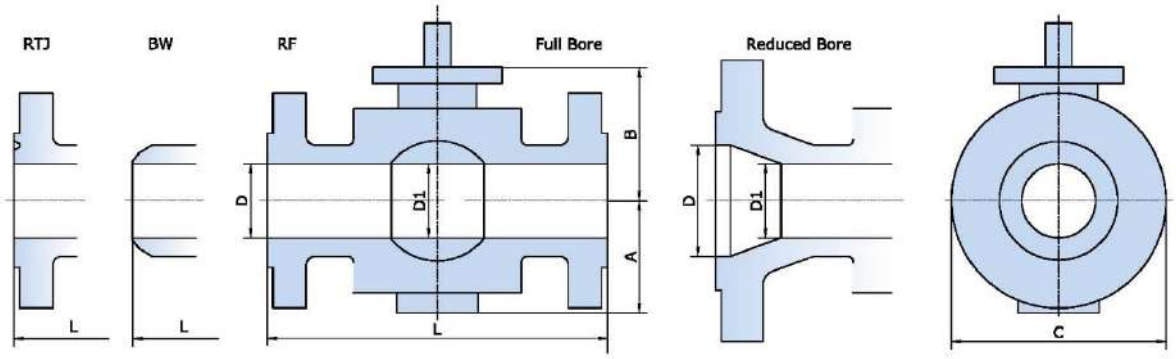

ASME CLASS 150 (PN 20) REDUCED BORE

Size *in/mm*	D	D1	L			Casting			Forging			Weight	
			RF	RTJ	BW	A	B	C	A	B	C	RF/RTJ *(lb/kg)*	BW *(lb/kg)*
2x1 ½	1.93	1.5	7	7.5	8.5	3.3	4.9	5.9	3	4.3	5.9	33	26
50x40	*49*	*38*	*178*	*191*	*216*	*85*	*125*	*150*	*75*	*110*	*150*	*15*	*12*
2 ½x2	2.44	1.93	7.5	8	9.5	3.3	5.3	7.1	3.1	4.6	7.1	49	42
65x50	*62*	*49*	*190*	*203*	*241*	*86*	*135*	*180*	*79*	*117*	*180*	*22*	*19*
3x2	2.94	1.93	8	8.5	11.13	3.3	5.3	7.5	3.1	4.6	7.5	55	48
80x50	*74*	*49*	*203*	*216*	*283*	*86*	*135*	*190*	*79*	*117*	*190*	*25*	*22*
4x3	3.94	2.94	9	9.5	12	4.9	9.1	7.8	4	5.5	9.1	97	81
100x80	*100*	*74*	*229*	*241*	*305*	*125*	*230*	*198*	*102*	*141*	*230*	*44*	*37*
6x4	5.94	3.94	15.5	16	18	5.5	7.5	11	4.8	6.7	11	154	147
150x100	*150*	*100*	*394*	*406*	*457*	*140*	*190*	*280*	*123*	*170*	*280*	*70*	*67*
8x6	7.94	5.94	18	18.5	20.5	7.2	9.2	13.6	6.8	8.7	13.6	436	414
200x150	*201*	*150*	*457*	*470*	*521*	*184*	*233*	*345*	*172.5*	*222*	*345*	*198*	*188*
10x8	9.94	7.94	21	21.5	22	9	10	1.6	9.1	10	15.9	715	671
250x200	*252*	*201*	*533*	*546*	*559*	*228*	*253*	*405*	*230*	*255*	*405*	*325*	*305*
12x10	11.94	9.94	24	24.5	25	10.6	11.4	19.1	11.2	11.8	19.1	913	843
300x250	*303*	*252*	*610*	*622*	*635*	*268*	*290*	*485*	*285*	*300*	*485*	*415*	*383*
14x10	13.19	9.94	27	27.5	30	10.6	11.4	21	11.2	11.8	21	1151	1104
350x250	*334*	*252*	*686*	*699*	*762*	*268*	*290*	*535*	*285*	*300*	*535*	*523*	*502*
16x12	15.19	11.94	30	30.5	33	12.9	15.6	22.2	13.4	13.4	23.4	1639	1551
400x300	*385*	*303*	*762*	*775*	*838*	*327*	*395*	*565*	*340*	*340*	*595*	*745*	*705*
18x14	17.19	13.19	34	34.5	36	14.8	15.6	25	14.2	15	25	2288	2002
450x350	*436*	*334*	*864*	*877*	*314*	*375*	*395*	*635*	*360*	*381*	*635*	*1040*	*910*
20x16	19.19	15.19	36	36.5	39	15.9	17.8	27.9	15.7	21.7	27.6	2574	2134
500x400	*487*	*385*	*914*	*927*	*991*	*405*	*452*	*708*	*400*	*419*	*700*	*1170*	*970*
24x20	23.19	19.19	42	42.5	45	21.7	21.7	34.3	19.3	19.9	33.1	4213	4026
600x500	*589*	*487*	*1067*	*1080*	*1143*	*550*	*550*	*870*	*490*	*505*	*840*	*1915*	*1830*
30x24	28.94	23.19	51	(1)	55	24	24.1	40.4	23.6	23.9	39.8	2948	7744
750x600	*735*	*589*	*1295*		*1397*	*610*	*612*	*1026*	*600*	*607*	*1010*	*1340*	*3520*
36x30	34.44	28.94	60	(1)	68	28	30.6	49.8	29	29	48.8	13420	12760
900x750	*874*	*735*	*1524*		*1727*	*710*	*777*	*1265*	*737*	*737*	*1240*	*6100*	*5800*

(1) Contact our sales representative for more information.

DIMENSIONS AND WEIGHTS

ASME CLASS 300 (PN 50)

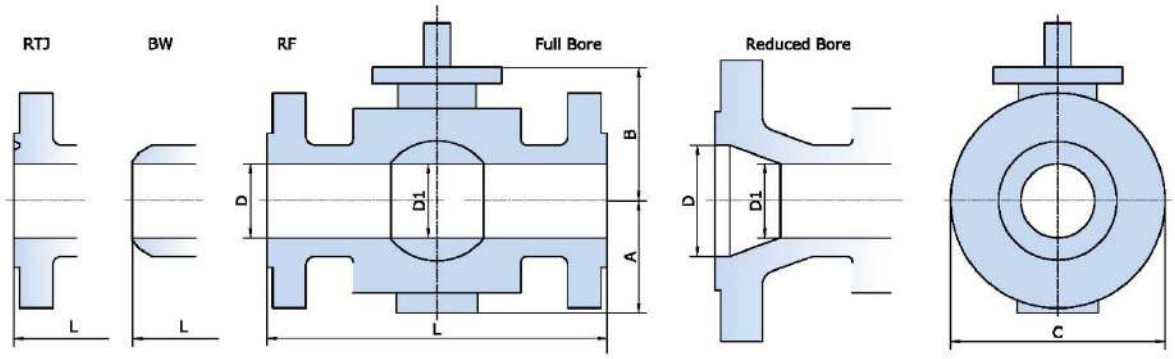

ASME CLASS 300 (PN 50) FULL BORE

Size *in/mm*	D	D1	L			Casting			Forging			Weight	
			RF	RTJ	BW	A	B	C	A	B	C	RF/RTJ *(lb/kg)*	BW *(lb/kg)*
2	1.93	1.93	8.5	9.13	8.5	3.6	5.3	6.5	3.3	4.6	6.5	62	51
50	*49*	*49*	*216*	*232*	*216*	*91*	*135*	*165*	*83*	*117*	*165*	*28*	*23*
2 ½	2.44	2.44	9.5	10.12	9.5	3.7	5.9	7.3	3.6	5.7	7.1	99	92
65	*62*	*62*	*241*	*257*	*241*	*95*	*150*	*185*	*92*	*145*	*180*	*45*	*42*
3	2.94	2.94	11.13	11.75	11.13	5	6.3	8.3	4.1	5.6	8.3	123	92
80	*74*	*74*	*282*	*298*	*283*	*126*	*161*	*210*	*105*	*141*	*210*	*56*	*42*
4	3.94	3.94	12	12.63	12	5.2	7.5	10	5	6.7	10	172	132
100	*100*	*100*	*305*	*321*	*305*	*132*	*190*	*255*	*128*	*170*	*255*	*78*	*60*
5	5	5	15.75	16.26	15.75	6.3	8.3	11.6	6.1	8	11.2	328	304
125	*125*	*125*	*400*	*413*	*400*	*160*	*210*	*295*	*155*	*202*	*285*	*149*	*138*
6	5.94	5.94	15.88	16.5	18	7.4	9.2	13	6.6	8.7	12.6	396	308
150	*150*	*150*	*403*	*419*	*457*	*189*	*233*	*330*	*168*	*222*	*320*	*180*	*140*
8	7.91	7.91	19.75	20.38	20.5	9	10	15.7	9.3	10	15.4	647	539
200	*201*	*201*	*502*	*518*	*521*	*228*	*253*	*398*	*235*	*255*	*392*	*294*	*245*
10	9.92	9.92	22.38	23	22	10.6	11.4	10.1	11.4	12	19.1	869	726
250	*252*	*252*	*568*	*584*	*559*	*268*	*290*	*485*	*290*	*305*	*485*	*395*	*330*
12	11.94	11.94	25.5	28.13	25.5	12.9	15.6	23.2	13.4	13.4	21.8	1463	1232
300	*303*	*303*	*648*	*664*	*635*	*327*	*395*	*590*	*340*	*340*	*554*	*665*	*560*
14	13.19	13.19	30	30.62	30	15.2	15.7	24.8	14.5	15	23.9	2178	1892
350	*334*	*334*	*762*	*778*	*762*	*385*	*400*	*630*	*368*	*384*	*606*	*990*	*860*
16	15.19	15.19	33	33.63	33	15.9	17.8	28.2	16.5	16.5	27.1	2829	2277
400	*385*	*385*	*838*	*854*	*838*	*405*	*452*	*716*	*420*	*419*	*689*	*1286*	*1035*
18	17.19	17.19	36	36.63	36	18.9	19.3	31.5	18.5	18.9	30.7	3630	2860
450	*436*	*436*	*914*	*930*	*914*	*480*	*490*	*800*	*470*	*480*	*780*	*1650*	*1300*
20	19.17	19.17	39	39.75	39	21.7	21.7	34.3	19.5	19.9	33.5	4268	3872
500	*487*	*487*	*991*	*1010*	*991*	*550*	*550*	*870*	*495*	*505*	*850*	*1940*	*1760*
22	21.19	21.19	43	43.88	43	20.3	21.7	37.8	20.1	21.5	37.2	5390	4840
550	*538*	*538*	*1092*	*1114*	*1092*	*515*	*550*	*960*	*510*	*545*	*945*	*2450*	*2200*
24	23.19	23.19	45	45.888	45	24	24.8	40.6	24.8	23.9	40.9	6622	6336
600	*589*	*589*	*1143*	*1165*	*1143*	*610*	*630*	*1030*	*630*	*607*	*1038*	*3010*	*2880*
26	24.94	24.94	49	50	49	28.4	26	43.1	24.5	25.6	42.7	8404	7810
650	*633*	*633*	*1245*	*1270*	*1245*	*630*	*660*	*1095*	*623*	*651*	*1085*	*3820*	*3550*
28	26.94	26.94	53	54	53	27.6	28	46.9	27.2	27.6	46.3	10604	9372
700	*684*	*684*	*1346*	*1372*	*1346*	*700*	*710*	*1190*	*690*	*700*	*1175*	*4820*	*4260*
30	28.94	28.94	55	56	55	28	30.6	49.8	29.4	29.4	49.8	12320	11330
750	*735*	*735*	*1397*	*1422*	*1397*	*710*	*777*	*1265*	*747*	*747*	*1266*	*5600*	*5150*
32	30.69	30.69	60	61.13	60	30.7	31.1	53.1	30.3	30.7	53	14190	12430
800	*779*	*779*	*1524*	*1552*	*1524*	*780*	*790*	*1350*	*770*	*780*	*1345*	*6450*	*5650*
34	32.69	32.69	64	65.1	64	31.9	30.5	47.8	31.9	30.5	47.8	15510	14190
850	*830*	*830*	*1626*	*1654*	*1626*	*810*	*775*	*1215*	*810*	*775*	*1215*	*7050*	*6450*
36	34.41	34.41	68	69.13	68	35.6	34.4	58.3	34	34	58.7	19800	18480
900	*874*	*874*	*1727*	*1756*	*1727*	*905*	*875*	*1480*	*864*	*864*	*1492*	*9000*	*8400*
40	38.44	38.44	76.77	(1)	76.77	37	37	65	36.6	36.6	64.6	24200	22660
1000	*976*	*976*	*1950*		*1950*	*940*	*940*	*1650*	*930*	*930*	*1640*	*11000*	*10300*
42	40.19	40.19	82.68	(1)	82.68	38.2	38.2	66.9	37.8	37..8	66.5	31900	29920
1050	*1020*	*1020*	*2100*		*2100*	*970*	*970*	*1700*	*960*	*960*	*1690*	*14500*	*13600*
48	45.94	45.94	85.43	(1)	85.43	44.1	44.1	77.4	43.3	43.3	76.6	39600	37620
1200	*1166*	*1166*	*2170*		*1270*	*1120*	*1120*	*1965*	*1100*	*1100*	*1945*	*18000*	*17100*
56	53.56	53.56	98.43	(1)	98.43	50.4	53.1	90.4	50	52.2	89.8	60060	56760
1400	*1360*	*1360*	*2500*		*2500*	*1280*	*1350*	*2295*	*1270*	*1325*	*2282*	*27300*	*25800*

(1) Contact our sales representative for more information.

DIMENSIONS AND WEIGHTS

ASME CLASS 300 (PN 50)

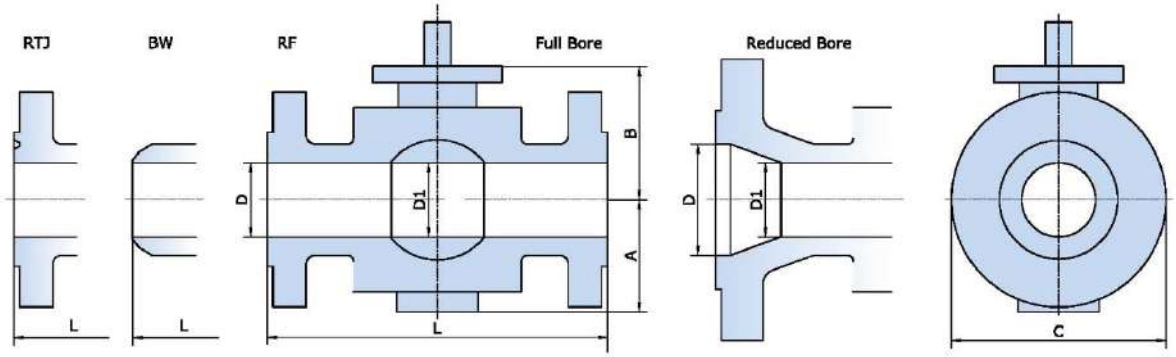

ASME CLASS 300 (PN 50) REDUCED BORE

Size *in/mm*	D	D1	L			Casting			Forging			Weight	
			RF	RTJ	BW	A	B	C	A	B	C	RF/RTJ *(lb/kg)*	BW *(lb/kg)*
2x1 ½	1.93	1.5	8.5	9.11	8.5	3.5	5.1	6.5	3.3	4.3	6.5	40	26
50x40	*49*	*38*	*216*	*232*	*216*	*90*	*130*	*165*	*83*	*110*	*165*	*18*	*12*
2 ½x2	2.44	1.93	9.5	10.13	9.5	3.6	5.3	6.5	3.3	4.6	7.5	57	48
65x50	*62*	*49*	*241*	*257*	*241*	*91*	*135*	*165*	*83*	*117*	*190*	*26*	*22*
3x2	2.94	1.93	11.13	11.75	11.13	3.6	5.3	8.3	3.3	4.6	8.3	70	51
80x50	*74*	*49*	*283*	*298*	*283*	*91*	*135*	*210*	*83*	*117*	*210*	*32*	*23*
4x3	3.94	2.94	12	12.63	12	5	6.3	10	5	5.6	10	119	90
100x80	*100*	*74*	*305*	*321*	*305*	*128*	*161*	*255*	*128*	*141*	*255*	*54*	*41*
6x4	5.94	3.94	15.88	16.5	18	6.3	7.5	12.6	6.3	6.7	12.6	220	165
150x100	*150*	*100*	*403*	*419*	*457*	*160*	*190*	*320*	*160*	*170*	*320*	*100*	*75*
8x6	7.94	5.94	19.75	20.38	20.5	7.5	9.2	15	7.5	8.7	15	495	451
200x150	*201*	*150*	*518*	*518*	*521*	*190*	*233*	*380*	*190*	*222*	*380*	*225*	*205*
10x8	9.94	7.94	22.38	23	22	9	10	17.5	9.3	10	17.5	803	748
250x200	*252*	*201*	*568*	*584*	*559*	*228*	*253*	*445*	*235*	*255*	*445*	*365*	*340*
12x10	11.94	9.94	25.5	26.13	25	10.6	11.4	20.5	11.4	12	20.5	1320	1239
300x250	*303*	*252*	*648*	*664*	*635*	*268*	*290*	*520*	*290*	*305*	*520*	*600*	*563*
14x10	13.19	9.94	30	30.63	30	10.6	114	23	11.4	12	23	1430	1327
350x250	*334*	*252*	*762*	*778*	*762*	*268*	*290*	*585*	*290*	*305*	*585*	*650*	*603*
16x12	15.19	11.94	33	33.63	33	12.9	15.6	23.2	13.4	13.4	21.8	1782	1586
400x300	*385*	*334*	*838*	*854*	*838*	*327*	*395*	*590*	*340*	*340*	*554*	*810*	*721*
18x14	17.19	13.19	36	36.62	36	15.2	15.7	28	14.5	15.1	28	3300	3102
450x350	*436*	*334*	*914*	*930*	*914*	*385*	*400*	*710*	*368*	*384*	*710*	*1500*	*1410*
20x16	19.19	15.19	39	49.75	39	16	17.8	28.2	16.5	16.5	27.1	4290	3630
500x400	*487*	*385*	*991*	*1010*	*991*	*405*	*452*	*716*	*420*	*419*	*689*	*1950*	*1650*
24x20	23.19	19.19	45	45.88	45	21.7	21.7	36	19.5	19.9	36	5500	4950
600x500	*589*	*487*	*1143*	*1165*	*1143*	*550*	*550*	*915*	*495*	*505*	*915*	*2500*	*2250*
30x24	28.94	23.19	55	56	55	24	24.8	42.9	24.85	23.9	42.9	9350	8492
750x600	*735*	*589*	*1397*	*1422*	*1397*	*610*	*630*	*1090*	*630*	*607*	*1090*	*4250*	*3860*
36x30	34.44	28.94	55	56	55	28	30.6	50	29.4	29.4	50	13900	12892
900x750	*874*	*735*	*1397*	*1422*	*1397*	*710*	*777*	*1270*	*747*	*747*	*1270*	*6350*	*5860*

(1) Contact our sales representative for more information.

DIMENSIONS AND WEIGHTS

ASME CLASS 600 (PN 100)

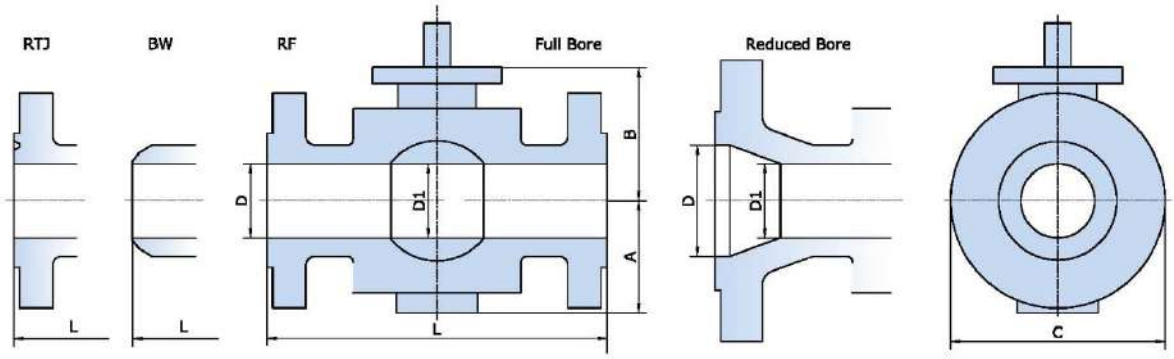

ASME CLASS 600 (PN 100) FULL BORE

Size *in/mm*	D	D1	L			Casting			Forging			Weight	
			RF	RTJ	BW	A	B	C	A	B	C	RF/RTJ *(lb/kg)*	BW *(lb/kg)*
2	1.93	1.93	11.5	11.63	11.5	3.7	5.7	6.5	3.3	5	6.5	73	62
50	*49*	*49*	*292*	*295*	*292*	*95*	*145*	*165*	*83*	*126*	*165*	*33*	*28*
2 ½	2.44	2.44	13	13.13	13	3.9	6.3	7.7	3.7	5.9	7.4	119	106
65	*62*	*62*	*330*	*333*	*330*	*100*	*160*	*195*	*95*	*150*	*188*	*54*	*48*
3	2.94	2.94	14	14.13	14	5	7.2	8.3	4.6	6.1	8.3	150	110
80	*74*	*74*	*356*	*359*	*356*	*128*	*184*	*210*	*117*	*155*	*210*	*68*	*50*
4	3.94	3.94	17	17.13	17	5.8	8.2	11.6	5.4	7	10.8	242	209
100	*100*	*100*	*432*	*435*	*432*	*148*	*209*	*295*	*138*	*177*	*275*	*110*	*95*
5	5	5	20	2012	20	6.7	8.2	13.4	6.5	8	13	407	352
125	*127*	*125*	*508*	*511*	*508*	*170*	*208*	*340*	*165*	*202*	*330*	*185*	*160*
6	5.94	5.94	22	22.13	22	7.7	9.8	14	7	9	14	528	444
150	*150*	*150*	*559*	*562*	*559*	*195*	*250*	*355*	*178*	*228*	*355*	*240*	*202*
8	7.91	7.91	26	26.13	26	9.6	11.1	16.5	9.6	10.5	16.5	796	638
200	*201*	*201*	*660*	*663*	*660*	*245*	*283*	*420*	*245*	*267*	*420*	*362*	*290*
10	9.92	9.92	31	31.13	31	11.4	12.6	20	11.9	12.3	20	1166	898
250	*252*	*252*	*787*	*790*	*787*	*290*	*320*	*510*	*302*	*312*	*510*	*530*	*408*
12	11.94	11.94	33	33.13	33	14.2	15.3	22.8	13.8	14.5	22.6	1727	1430
300	*303*	*303*	*838*	*841*	*635*	*360*	*390*	*580*	*350*	*368*	*573*	*785*	*650*
14	13.19	13.19	35	35.12	35	15.6	16.1	25	15	15.6	24.8	2376	2002
350	*334*	*334*	*889*	*891*	*889*	*395*	*410*	*635*	*380*	*396*	*630*	*1080*	*910*
16	15.19	15.19	39	39.13	39	16.7	17.2	28.3	17.3	17.5	16.7	3564	3080
400	*385*	*385*	*991*	*994*	*991*	*425*	*436*	*720*	*440*	*444*	*423*	*1620*	*1400*
18	17.19	17.19	43	43.13	430	19.3	20.3	32.3	18.9	20	31.9	3982	3630
450	*436*	*435*	*1092*	*1095*	*1092*	*490*	*515*	*820*	*480*	*510*	*810*	*1810*	*1650*
20	19.17	19.17	47	47.25	47	22.6	22.7	36.2	20.6	20.7	34.4	5500	4818
500	*487*	*487*	*1194*	*1200*	*1194*	*575*	*576*	*920*	*522*	*525*	*875*	*2500*	*2190*
22	21.19	21.19	51	51.38	51	20.5	22	37.8	20.3	26.7	37.4	6270	5544
550	*538*	*538*	*1295*	*1305*	*1295*	*520*	*560*	*960*	*515*	*550*	*950*	*2850*	*2520*
24	23.19	23.19	55	55.38	55	23.8	25.2	41	24.4	25.2	41.3	8492	7612
600	*589*	*589*	*1397*	*1407*	*1397*	*605*	*640*	*1043*	*619*	*641*	*1050*	*3860*	*3460*
26	24.94	24.94	57	57.5	57	25.6	26.4	43.9	25.5	26.2	43.3	9504	8470
650	*633*	*633*	*1448*	*1461*	*1448*	*650*	*670*	*1115*	*640*	*665*	*1100*	*4320*	*3850*
28	26.94	26.94	61	61.5	61	26.8	23.3	48	26.6	28.1	47.6	12848	11660
700	*684*	*684*	*1549*	*1562*	*1594*	*680*	*720*	*1220*	*675*	*715*	*1210*	*5840*	*5300*
30	28.94	28.94	65	65.5	65	29.9	30.6	51.8	29.1	30.6	51	15686	14080
750	*735*	*735*	*1651*	*1664*	*1651*	*760*	*777*	*1315*	*740*	*776*	*1295*	*7130*	*6400*
32	30.69	30.69	70	70	70.63	31.1	31.5	55.5	30.9	31.3	53.9	20240	18260
800	*779*	*779*	*1778*	*1778*	*1794*	*790*	*790*	*1410*	*785*	*794*	*1370*	*9200*	*8300*
34	32.69	32.69	76	76.61	76	33.1	33.9	56.3	32.7	33.5	57.5	22660	20900
850	*830*	*830*	*1930*	*1946*	*1930*	*840*	*860*	*1480*	*830*	*850*	*1460*	*10300*	*9500*
36	34.41	34.41	82	82.63	82	35	36.6	60.9	35.4	36.2	60.9	25740	23100
900	*874*	*874*	*2083*	*2099*	*2083*	*890*	*930*	*1546*	*900*	*920*	*1548*	*11700*	*10500*
40	38.44	38.44	80.71	(1)	80.71	37.8	38	65.6	37.4	37.6	65.2	31460	29172
1000	*976*	*976*	*2050*		*2050*	*960*	*965*	*1665*	*950*	*955*	*1655*	*14300*	*13260*
42	40.19	40.19	82.68	(1)	82.68	40.9	41.7	72.8	40.6	41.3	71.7	36080	33660
1050	*1020*	*1020*	*2100*		*2100*	*1040*	*1060*	*1850*	*1030*	*1050*	*1820*	*16400*	*15300*
48	45.94	45.94	94.49	(1)	94.49	46.9	46.3	78.3	46.5	45.9	77.6	49940	46200
1200	*1166*	*1166*	*2400*		*2400*	*1190*	*1175*	*1990*	*1180*	*1165*	*1970*	*22700*	*21000*
56	53.56	53.56	106.3	(1)	106.3	54.5	54.3	93.5	54.2	53.5	92.6	81400	30800
1400	*1360*	*1360*	*2700*		*2700*	*1385*	*1380*	*2375*	*1376*	*1360*	*2352*	*37000*	*14000*

(1) Contact our sales representative for more information.

DIMENSIONS AND WEIGHTS

ASME CLASS 600 (PN 100)

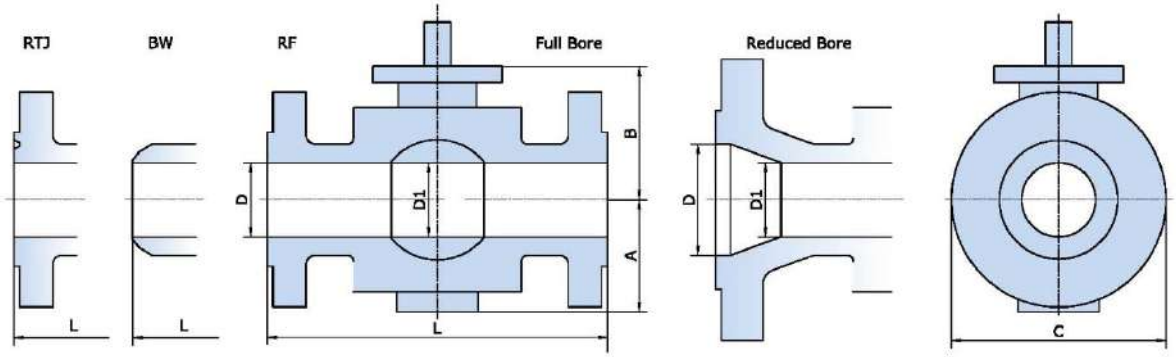

ASME CLASS 600 (PN 100) REDUCED BORE

Size *in/mm*	D	D1	L			Casting			Forging			Weight	
			RF	RTJ	BW	A	B	C	A	B	C	RF/RTJ *(lb/kg)*	BW *(lb/kg)*
2x1 ½	1.93	1.5	11.5	11.62	11.5	3.7	5.28	6.5	3.3	4.5	6.5	48	35
50x40	*49*	*38*	*292*	*295*	*292*	*94*	*134*	*165*	*83*	*115*	*165*	*22*	*16*
2 ½x2	2.44	1.93	13	13.13	13	3.7	5.7	7.5	3.3	5	7.5	64	55
65x50	*62*	*49*	*330*	*333*	*330*	*95*	*145*	*190*	*83*	*126*	*190*	*29*	*25*
3x2	2.94	1.93	14	14.13	14	3.7	5.7	8.3	3.3	5	8.3	81	55
80x50	*74*	*49*	*356*	*359*	*356*	*95*	*145*	*210*	*83*	*126*	*210*	*37*	*25*
4x3	3.94	2.94	17	17.13	17	5.4	7.2	10.8	5.5	6.1	10.8	163	110
100x80	*100*	*74*	*432*	*435*	*432*	*138*	*184*	*275*	*138*	*155*	*275*	*74*	*50*
6x4	5.94	3.94	22	22.13	22	7	8.2	14	7	7	14	330	187
150x100	*150*	*100*	*559*	*562*	*559*	*178*	*208*	*355*	*178*	*177*	*355*	*150*	*85*
8x6	7.94	5.94	26	26.13	26	8.3	9.8	16.5	8.3	9	16.5	638	528
200x150	*201*	*150*	*660*	*663*	*660*	*210*	*250*	*420*	*210*	*228*	*420*	*290*	*240*
10x8	9.94	7.94	31	31.13	31	9.6	11.1	20	9.6	10.5	20	1067	880
250x200	*252*	*201*	*787*	*790*	*787*	*245*	*283*	*510*	*245*	*267*	*510*	*485*	*400*
12x10	11.94	9.94	33	33.13	33	11.4	12.6	22	11.9	12.3	22	1463	1100
300x250	*303*	*252*	*838*	*841*	*838*	*290*	*320*	*560*	*302*	*312*	*560*	*665*	*500*
14x10	13.19	9.94	35	35.13	35	11.4	12.6	23.8	11.9	12.3	23.8	2266	2002
350x250	*334*	*252*	*889*	*892*	*889*	*290*	*320*	*605*	*302*	*312*	*605*	*1030*	*910*
16x12	15.19	11.94	39	39.13	39	14.1	15.4	27	13.8	14.5	27	2530	2200
400x300	*385*	*303*	*991*	*994*	*991*	*360*	*390*	*685*	*350*	*368*	*685*	*1150*	*1000*
18x14	17.19	13.19	43	43.13	43	15.6	16.1	29.3	15.2	15.6	29.3	3630	2860
450x350	*436*	*334*	*1092*	*1095*	*1092*	*395*	*410*	*745*	*385*	*396*	*745*	*1650*	*1300*
20x16	19.19	15.19	47	47.25	47	16.7	17.2	32	17.3	17.5	32.1	5632	4620
500x400	*487*	*385*	*1194*	*1200*	*1194*	*425*	*436*	*815*	*440*	*444*	*815*	*2560*	*2100*
24x20	23.19	19.19	55	55.38	55	22.6	22.7	37	20.6	20.7	37	6710	5720
600x500	*589*	*487*	*1397*	*1407*	*1397*	*575*	*576*	*940*	*522*	*525*	*940*	*3050*	*2600*
30x24	28.94	23.19	61	65.5	65	23.8	25.2	42.9	24.4	25.2	42.9	10780	9240
750x600	*735*	*589*	*1651*	*1664*	*1651*	*605*	*640*	*1090*	*619*	*641*	*1090*	*4900*	*4200*
36x30	34.41	28.94	82	82.63	82	35	36.6	60.9	35.4	36.2	60.9	20020	17600
900x750	*874*	*735*	*2083*	*2099*	*2083*	*890*	*930*	*1546*	*900*	*920*	*1548*	*9100*	*8000*

(1) Contact our sales representative for more information.

DIMENSIONS AND WEIGHTS

ASME CLASS 900 (PN 150)

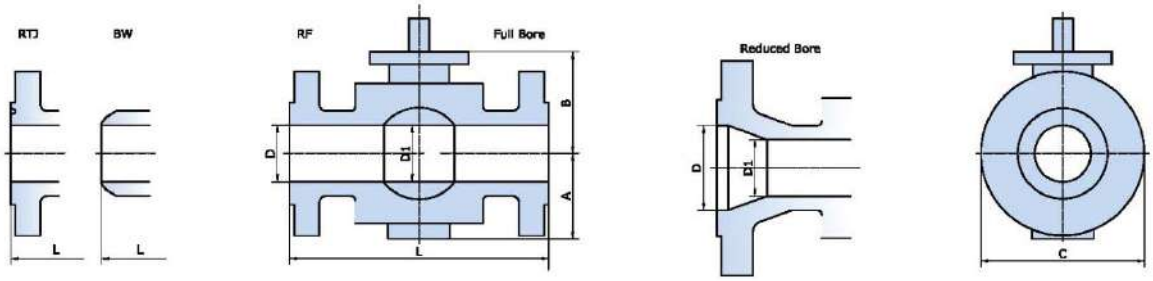

ASME CLASS 900 (PN 150) FULL BORE

Size *in/mm*	D	D1	L			Casting			Forging			Weight	
			RF	RTJ	BW	A	B	C	A	B	C	RF/RTJ *(lb/kg)*	BW *(lb/kg)*
2	1.93	1.93	14.5	14.63	14.5	4.3	5.5	8.5	4.3	5.5	8.5	128	75
50	*49*	*49*	*368*	*371*	*368*	*108*	*140*	*215*	*108*	*140*	*215*	*58*	*34*
2 ½	2.44	2.44	16.5	16.62	16.5	4.8	6.3	9.6	4.8	6.3	9.6	165	123
65	*62*	*62*	*419*	*422*	*419*	*123*	*160*	*245*	*123*	*160*	*245*	*75*	*56*
3	2.94	2.94	15	15.13	15	4.7	6.3	9.4	4.7	6.3	9.4	183	152
80	*74*	*74*	*381*	*384*	*381*	*120*	*161*	*240*	*120*	*161*	*240*	*83*	*69*
4	3.94	3.94	18	18.13	18	5.7	7.1	11.4	5.7	7.1	11.4	356	319
100	*100*	*100*	*457*	*460*	*457*	*145*	*180*	*290*	*145*	*180*	*290*	*162*	*145*
5	4.76	4.76	22	22.13	22	6.7	8.5	13.8	6.7	8.5	13.8	517	429
125	*121*	*121*	*559*	*562*	*559*	*170*	*215*	*350*	*170*	*215*	*350*	*235*	*195*
6	5.94	5.94	24	24.13	24	7.3	9.4	15	7.3	9.4	15	715	517
150	*150*	*150*	*610*	*613*	*610*	*185*	*239*	*380*	*185*	*239*	*380*	*325*	*235*
8	7.94	7.94	29	29.13	29	7.7	11.3	18.5	7.7	11.3	18.5	1047	772
200	*201*	*201*	*737*	*740*	*737*	*295*	*288*	*470*	*295*	*288*	*470*	*476*	*351*
10	9.94	9.94	33	33.13	33	13.8	13.8	21.5	13.8	13.8	21.5	1969	1650
250	*252*	*252*	*838*	*841*	*838*	*350*	*350*	*545*	*350*	*350*	*545*	*895*	*750*
12	11.94	11.94	38	38.13	38	14.6	15.3	24	14.6	15.3	24	2519	2189
300	*303*	*303*	*965*	*968*	*965*	*370*	*388*	*610*	*370*	*388*	*610*	*1145*	*995*
14	12.69	12.69	40.5	40.88	40.5	16.9	16.9	26.2	16.1	16.1	25.9	3278	2519
350	*322*	*322*	*1029*	*1039*	*1029*	*430*	*430*	*665*	*410*	*410*	*658*	*1490*	*1145*
16	14.69	14.69	44.5	44.88	44.5	17.7	18.1	29.5	17.7	18.1	29.5	4092	3190
400	*373*	*373*	*1130*	*1140*	*1130*	*450*	*460*	*750*	*450*	*460*	*750*	*1860*	*1450*
18	16.69	16.69	48	48.5	48	19.3	20.9	32.3	19.3	20.9	32.3	5841	4554
450	*423*	*423*	*1219*	*1232*	*1219*	*490*	*530*	*820*	*490*	*530*	*820*	*2655*	*2070*
20	18.56	18.56	52	52.5	52	23.2	22.2	36.5	23.2	22.2	36.5	6952	5357
500	*471*	*471*	*1321*	*1334*	*1321*	*590*	*565*	*928*	*590*	*565*	*928*	*3160*	*2435*
24	22.44	22.44	61	61.75	61	24.8	24.2	41.7	24.8	24.2	41.7	11220	8360
600	*570*	*570*	*1549*	*1568*	*1549*	*630*	*615*	*1060*	*630*	*615*	*1060*	*5100*	*3800*
26	24.31	24.31	65	65.88	(1)	26.8	27.6	45.7	26.8	27.6	45.7	14850	11968
650	*617*	*617*	*1651*	*1673*		*680*	*700*	*1160*	*680*	*700*	*1160*	*6750*	*5440*
28	26.19	26.19	69	69.88	(1)	29.3	29.5	50.6	29.3	29.5	50.6	19250	16390
700	*665*	*665*	*1753*	*1775*		*743*	*750*	*1285*	*743*	*750*	*1285*	*8750*	*7450*
30	28.06	28.06	74	74.88	(1)	31.5	31.5	53.5	31.5	31.5	53.5	25300	21340
750	*712*	*712*	*1880*	*1092*		*800*	*800*	*1360*	*800*	*800*	*1360*	*11500*	*9700*

ASME CLASS 900 (PN 150) REDUCED BORE

Size *in/mm*	D	D1	L			Casting			Forging			Weight	
			RF	RTJ	BW	A	B	C	A	B	C	RF/RTJ *(lb/kg)*	BW *(lb/kg)*
2x1 ½	1.93	1.5	14.5	14.62	14.5	4.3	4.5	8.5	4.3	4.5	8.5	99	55
50x40	*49*	*38*	*215*	*371*	*368*	*108*	*115*	*215*	*108*	*115*	*215*	*45*	*25*
2 ½x2	2.44	1.93	16.5	16.63	16.5	4.3	5.1	9.6	4.3	5.1	9.6	123	81
65x50	*62*	*49*	*419*	*422*	*419*	*108*	*140*	*245*	*108*	*140*	*245*	*56*	*37*
3x2	2.94	1.93	15	15.13	15	4.3	5.1	9.4	4.3	5.1	9.4	143	110
80x50	*74*	*49*	*381*	*384*	*381*	*108*	*140*	*240*	*108*	*140*	*240*	*65*	*50*
4x3	3.94	2.94	18	18.13	18	5.7	6.3	11.4	5.7	6.3	11.4	238	172
100x80	*100*	*74*	*457*	*460*	*457*	*145*	*161*	*290*	*145*	*161*	*290*	*108*	*78*
6x4	5.94	3.94	24	24.13	24	7.5	7.1	15	7.5	7.1	15	462	330
150x100	*150*	*100*	*610*	*613*	*610*	*190*	*180*	*380*	*190*	*180*	*380*	*210*	*150*
8x6	7.94	5.94	29	29.13	29	9.3	9.4	18.5	9.3	9.4	18.5	715	528
200x150	*201*	*150*	*737*	*740*	*737*	*235*	*239*	*470*	*235*	*239*	*470*	*325*	*240*
10x8	9.94	7.94	33	33.13	33	11.3	11.3	21.5	11.3	11.3	21.5	902	638
250x200	*252*	*201*	*838*	*841*	*838*	*295*	*288*	*545*	*295*	*288*	*545*	*410*	*290*
12x10	11.94	9.94	38	38.13	38	13	13.8	24	13	13.8	24	2420	1936
300x250	*303*	*252*	*965*	*968*	*965*	*330*	*350*	*610*	*330*	*350*	*610*	*1100*	*880*
14x10	14.69	11.94	44.5	44.88	44.5	14.6	15.3	24	14.6	15.3	24	3190	2816
350x250	*322*	*303*	*1130*	*1140*	*1130*	*370*	*388*	*610*	*370*	*388*	*610*	*1450*	*1280*
16x12	14.69	11.94	44.5	44.88	44.5	14.6	15.6	24	14.6	15.6	24	3608	2970
400x300	*373*	*303*	*1130*	*1140*	*1130*	*370*	*388*	*610*	*370*	*388*	*610*	*1640*	*1350*
18x14	16.69	12.69	48	48.5	48	16.9	16.9	30.9	16.1	16.1	30.9	5280	4290
450x350	*423*	*322*	*1219*	*1232*	*1219*	*430*	*430*	*785*	*410*	*410*	*785*	*2400*	*1950*
20x16	18.56	14.69	52	52.5	52	17.7	18.1	33.7	17.7	18.1	33.7	6292	4730
500x400	*471*	*373*	*1321*	*1334*	*1321*	*450*	*460*	*855*	*450*	*460*	*855*	*2860*	*2150*
24x20	22.44	18.56	61	61.75	61	23.2	22.2	40.9	23.2	22.2	40.9	9240	6336
600x500	*570*	*471*	*1549*	*1568*	*1549*	*590*	*565*	*1040*	*590*	*565*	*1040*	*4200*	*2880*
30x24	28.06	22.44	74	74.88	(1)	24.8	24.2	48.4	24.8	24.2	48.4	(1)	(1)
750x600	*712*	*570*	*1880*	*1902*		*630*	*615*	*1230*	*630*	*615*	*1230*		

(1) Contact our sales representative for more information.

ERREESSE VALVE

DIMENSIONS AND WEIGHTS

ASME CLASS 1500 (PN 250)

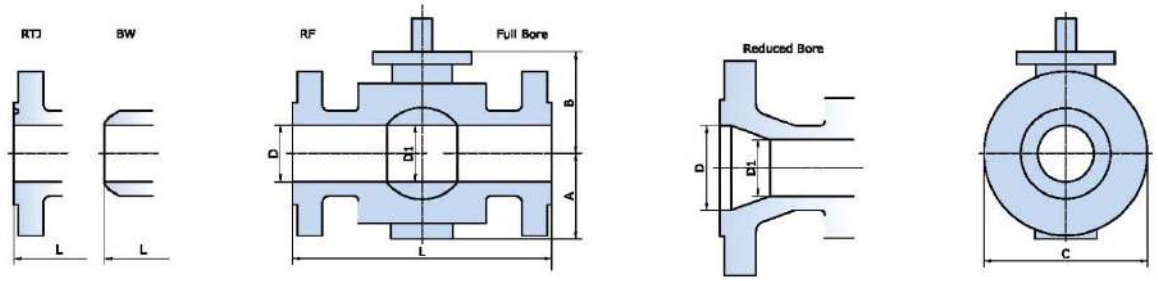

ASME CLASS 1500 (PN 250) FULL BORE

Size *in/mm*	D	D1	L			Casting			Forging			Weight	
			RF	RTJ	BW	A	B	C	A	B	C	RF/RTJ *(lb/kg)*	BW *(lb/kg)*
2	1.93	1.93	14.5	14.63	14.5	4.3	5.5	8.5	4.3	5.5	8.5	128	75
50	*49*	*49*	*368*	*371*	*368*	*108*	*140*	*215*	*108*	*140*	*215*	*58*	*34*
2 ½	2.44	2.44	16.5	16.62	16.5	4.8	6.3	9.6	4.8	6.3	9.6	174	136
65	*62*	*62*	*419*	*422*	*419*	*123*	*160*	*245*	*123*	*160*	*245*	*79*	*62*
3	2.94	2.94	18.5	18.63	18.5	5.5	7.4	10.4	5.5	7.4	10.4	216	154
80	*74*	*74*	*470*	*473*	*470*	*140*	*187*	*265*	*140*	*187*	*265*	*98*	*70*
4	3.94	3.94	21.5	21.63	21.5	6.5	7.9	12.2	6.5	7.9	12.2	365	317
100	*100*	*100*	*546*	*549*	*546*	*165*	*201*	*310*	*165*	*201*	*310*	*166*	*144*
5	4.37	4.37	26.5	27.04	26.5	6.9	8.7	14.8	6.9	8.7	14.8	847	642
125	*111*	*111*	*673*	*676*	*673*	*175*	*220*	*375*	*175*	*220*	*375*	*385*	*292*
6	5.69	5.69	27.75	28	27.75	9.6	11.3	16.3	9.6	11.3	16.3	1030	834
150	*144*	*144*	*705*	*711*	*705*	*219*	*288*	*415*	*219*	*288*	*415*	*468*	*379*
8	7.56	7.56	32.75	33.13	32.75	11.6	12.8	19.1	11.6	12.8	19.1	1478	964
200	*192*	*191*	*832*	*842*	*832*	*295*	*325*	*485*	*295*	*325*	*485*	*672*	*438*
10	9.44	9.44	39	39.38	39	14.2	15.9	23.6	14.2	15.9	23.6	2222	1716
250	*239*	*239*	*991*	*1001*	*991*	*360*	*405*	*600*	*360*	*405*	*600*	*1010*	*780*
12	11.31	11.31	44.5	45.13	44.5	15.7	17	27.2	15.7	17	27.2	3388	2420
300	*287*	*287*	*1130*	*1146*	*1130*	*400*	*432*	*692*	*400*	*432*	*692*	*1540*	*1100*
14	12.44	12.44	49.5	50.25	49.5	19.3	18.9	30.7	18.7	18.5	30.1	6820	5280
350	*315*	*315*	*1259*	*1276*	*1257*	*490*	*480*	*780*	*475*	*469*	*765*	*3100*	*2400*
16	14.19	14.19	54.5	55.38	54.5	24.8	23.5	38.6	24.8	23.5	38.6	9900	6072
400	*360*	*360*	*1384*	*1407*	*1384*	*629*	*598*	*980*	*629*	*598*	*980*	*4500*	*2760*
18	16	16	60.5	61.38	(1)	24	24.4	39.4	24	24.4	39.4	13420	10670
450	*406*	*406*	*1537*	*1559*		*610*	*620*	*1000*	*610*	*620*	*1000*	*6100*	*4850*
20	17.88	17.88	65.5	66.38	(1)	25.6	25.6	41.9	25.6	25.6	41.9	16720	12540
500	*454*	*454*	*1664*	*1686*		*650*	*650*	*1065*	*650*	*650*	*1065*	*7600*	*5700*
24	21.5	21.5	76.5	77.63	(1)	29.9	31.4	50.2	29.9	31.4	50.2	21120	15840
600	*546*	*546*	*1943*	*1972*		*760*	*798*	*1275*	*760*	*798*	*1275*	*9600*	*7200*

ASME CLASS 1500 (PN 250) REDUCED BORE

Size *in/mm*	D	D1	L			Casting			Forging			Weight	
			RF	RTJ	BW	A	B	C	A	B	C	RF/RTJ *(lb/kg)*	BW *(lb/kg)*
2x1 ½	1.93	1.5	14.5	14.62	14.5	4.3	4.5	8.5	4.3	4.5	8.5	95	48
50x40	*49*	*38*	*368*	*371*	*368*	*108*	*115*	*215*	*108*	*115*	*215*	*43*	*22*
2 ½x2	2.44	1.93	16.5	16.63	16.5	4.3	5.5	9.6	4.3	5.5	9.6	141	92
65x50	*62*	*49*	*419*	*422*	*419*	*108*	*140*	*245*	*108*	*140*	*245*	*64*	*42*
3x2	2.94	1.93	18.5	18.63	18.5	4.3	5.5	10.6	4.3	5.5	10.6	165	106
80x50	*74*	*49*	*470*	*473*	*470*	*108*	*140*	*265*	*108*	*140*	*265*	*75*	*48*
4x3	3.94	2.94	21.5	21.63	21.5	6.1	7.4	12.2	6.1	7.4	12.2	286	167
100x80	*100*	*74*	*546*	*549*	*546*	*155*	*187*	*310*	*155*	*187*	*310*	*130*	*76*
6x4	5.69	3.94	27.75	28	27.75	7.8	7.9	15.6	7.8	7.9	15.6	605	374
150x100	*144*	*100*	*705*	*711*	*705*	*198*	*201*	*395*	*198*	*201*	*395*	*275*	*170*
8x6	7.56	5.69	32.75	33.13	32.75	9.6	11.3	19.1	9.6	11.3	19.1	1320	924
200x150	*192*	*144*	*832*	*841*	*832*	*243*	*288*	*485*	*243*	*288*	*485*	*600*	*420*
10x8	9.44	7.56	39	39.38	39	11.6	12.8	23	11.6	12.8	23	1848	1078
250x200	*239*	*192*	*991*	*1001*	*991*	*295*	*325*	*585*	*295*	*325*	*585*	*840*	*490*
12x10	11.31	9.44	44.5	45.13	44.5	14.2	15.9	26.6	14.2	15.9	26.6	2750	1760
300x250	*287*	*239*	*1130*	*1146*	*1130*	*360*	*405*	*675*	*360*	*405*	*675*	*1250*	*800*
14x10	12.44	9.44	49.5	50.25	49.5	14.2	15.9	29.5	14.2	15.9	29.5	3630	2970
350x250	*315*	*239*	*1257*	*1276*	*1257*	*360*	*405*	*750*	*360*	*405*	*750*	*1650*	*1350*
16x12	14.19	11.31	54.5	55.38	54.5	15.7	17	32.5	15.7	17	32.5	4517	3520
400x300	*360*	*287*	*1384*	*1407*	*1384*	*400*	*432*	*825*	*400*	*432*	*825*	*2053*	*1600*
18x14	16	12.44	60.5	61.38	60.5	18.7	18.5	36	18.7	18.5	36	10956	8690
450x350	*406*	*315*	*1537*	*1559*	*1537*	*475*	*469*	*915*	*475*	*469*	*915*	*4980*	*3950*
20x16	17.88	14.19	65.5	66.38	(1)	24.8	23.5	38.8	24.8	23.5	38.8	12188	9350
500x400	*454*	*360*	*1664*	*1686*		*629*	*598*	*985*	*629*	*598*	*985*	*5540*	*4250*
24x20	21.5	17.88	76.5	77.63	76.5	25.6	25.6	46.1	25.6	25.6	46.1	24200	18920
600x500	*546*	*454*	*1943*	*1971*	*1943*	*650*	*650*	*1170*	*650*	*650*	*1170*	*11000*	*8600*

(1) Contact our sales representative for more information.

DIMENSIONS AND WEIGHTS

ASME CLASS 2500 (PN 420)

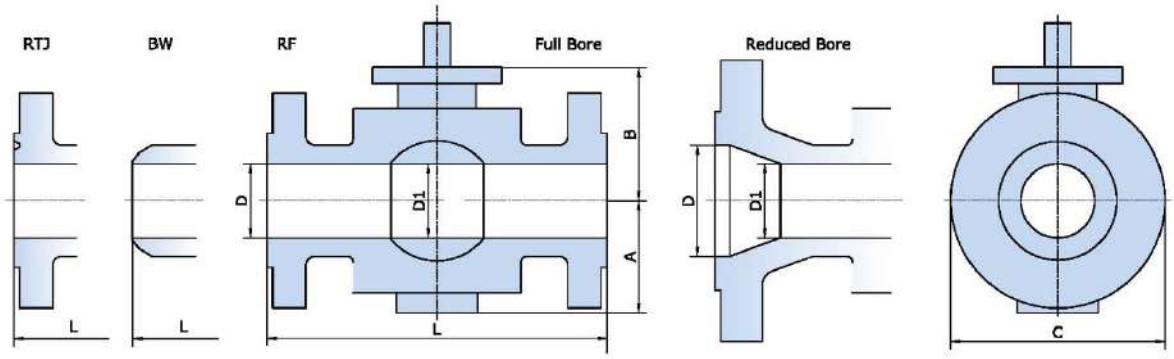

ASME CLASS 2500 (PN 420) FULL BORE

Size *in/mm*	D	D1	L			Casting			Forging			Weight	
			RF	RTJ	BW	A	B	C	A	B	C	RF/RTJ *(lb/kg)*	BW *(lb/kg)*
2	1.69	1.69	17.75	17.88	17.75	/	/	/	5.5	7.2	9.3	260	154
50	*42*	*42*	*451*	*454*	*451*				*139*	*183*	*235*	*118*	*70*
2 ½	2.06	2.06	20.32	20.56	20.32	/	/	/	5.2	6.8	10.4	378	275
65	*52*	*52*	*508*	*514*	*508*				*133*	*173*	*265*	*172*	*125*
3	2.44	2.44	22.75	23	22.75	/	/	/	6.3	8.1	12	484	363
80	*62*	*62*	*578*	*584*	*578*				*!60*	*205*	*305*	*220*	*165*
4	3.44	3.44	26.5	26.88	26.5	/	/	/	7.4	6.8	14	803	715
100	*87*	*87*	*673*	*683*	*673*				*188*	*173*	*355*	*365*	*325*
5	3.62	3.62	31.26	31.77	31.26	/	/	/	7.1	10	16.5	1342	1078
125	*92*	*92*	*794*	*807*	*794*				*180*	*255*	*420*	*610*	*490*
6	5.19	5.19	36	36.5	36	/	/	/	10.8	13.4	19.1	1650	1375
150	*131*	*131*	*914*	*927*	*914*				*275*	*341*	*485*	*750*	*625*
8	7.06	7.06	40.25	40.88	40.25	/	/	/	15	16.5	24.2	4620	3608
200	*179*	*179*	*1022*	*1038*	*1022*				*380*	*418*	*615*	*2100*	*1640*
10	8.81	8.81	50	50.88	50	/	/	/	18.9	20.5	31.9	6600	5588
250	*223*	*223*	*1270*	*1292*	*1270*				*480*	*520*	*810*	*3000*	*2540*
12	10.44	10.44	56	56.88	56	/	/	/	19.7	21.3	33.9	9240	7700
300	*265*	*265*	*1422*	*1444*	*1422*				*500*	*540*	*860*	*4200*	*3500*

ASME CLASS 2500 (PN 420) REDUCED BORE

Size in/mm	D	D1	L			Casting			Forging			Weight	
			RF	RTJ	BW	A	B	C	A	B	C	RF/RTJ (lb/kg)	BW (lb/kg)
2x1 ½	1.69	1.5	17.75	17.88	17.75	/	/	/	4.6	5.5	9.3	189	97
50x40	*42*	*38*	*368*	*454*	*451*				*118*	*140*	*235*	*86*	*44*
2 ½x2	2.06	1.69	20	20.25	20	/	/	/	5.5	7.2	10.4	297	242
65x50	*52*	*42*	*508*	*514*	*508*				*139*	*183*	*265*	*135*	*110*
3x2	2.44	1.69	22.75	23	22.75	/	/	/	5.5	7.2	12	341	220
80x50	*62*	*42*	*578*	*584*	*578*				*139*	*183*	*305*	*155*	*100*
4x3	3.44	2.66	26.5	26.88	26.5	/	/	/	7	10.4	14	627	374
100x80	*87*	*62*	*673*	*683*	*673*				*178*	*265*	*355*	*285*	*170*
6x4	5.19	3.44	36	36.5	36	/	/	/	9.6	10.7	19.1	1254	737
150x100	*131*	*87*	*914*	*927*	*914*				*243*	*273*	*485*	*570*	*335*
8x6	7.06	5.19	40.25	40.88	40.25	/	/	/	10.8	13.4	21.7	2332	1914
200x150	*179*	*131*	*1022*	*1038*	*1022*				*275*	*341*	*550*	*1060*	*870*
10x8	8.81	7.06	50	50.88	50	/	/	/	15	16.5	26.6	3740	2882
250x200	*223*	*179*	*1270*	*1292*	*1270*				*380*	*418*	*675*	*1700*	*1310*
12x10	10.44	8.81	56	56.88	56	/	/	/	18.9	20.5	31.9	5654	4510
300x250	*265*	*223*	*1422*	*1445*	*1422*				*480*	*520*	*810*	*2570*	*2050*

(1) Contact our sales representative for more information.

TOP MOUNTING DIMENSIONS AND TORQUE

NPS 2-4 (DN 50-100)

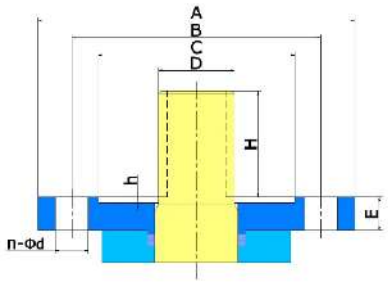

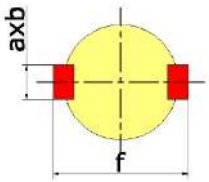

Size *in/mm*	Rating *Class/PN*	Torque[1] *ft-lb/N-m*	ISO F#	A	B	C	D	h	E	n-Φd[2]	H	Drive Key a x b	f	Gearbox Model
2 *50*	150 *20*	44 *60*	F10	4.92 *125*	4.02 *102*	2.76 *70*	0.945 *24*	0.118 *3*	0.63 *16*	4-Φ0.472 *4-Φ12*	1.575 *40*	0.315 x 0.276 *8 x 7*	1.063 *27*	GE-A1
	300 *50*	81 *110*	F10	4.92 *125*	4.02 *102*	2.76 *70*	0.945 *24*	0.118 *3*	0.63 *16*	4-Φ0.472 *4-Φ12*	1.575 *40*	0.315 x 0.276 *8 x 7*	1.063 *27*	GE-A1
	600 *100*	111 *150*	F10	4.92 *125*	4.02 *102*	2.76 *70*	0.945 *24*	0.118 *3*	0.63 *16*	4-Φ0.472 4-Φ12	1.575 *40*	0.315 x 0.276 *8 x 7*	1.063 *27*	GE-A1
	900 *150*	133 *180*	F12	5.91 *150*	4.92 *125*	3.35 *85*	1.102 *28*	0.118 *3*	0.83 *21*	4-Φ0.551 *4-Φ14*	1.772 *45*	0.315 x 0.276 *8 x 7*	1.063 *27*	GE-A2
	1500 *250*	148 *200*	F12	5.91 *150*	4.92 *125*	3.35 *85*	1.102 *28*	0.118 *3*	0.83 *21*	4-Φ0.551 *4-Φ14*	1.772 *45*	0.315 x 0.276 *8 x 7*	1.063 *27*	GE-A2
	2500 *420*	295 *400*	F16	8.27 *210*	6.5 *165*	5.12 *130*	1.417 *36*	0.118 *3*	1.10 *28*	4-Φ0.866 *4-Φ22*	2.362 *60*	0.394 x 0.315 *10 x 8*	1.339 *34*	GE-A4
2 ½ *65*	150 *20*	59 *80*	F10	4.92 *125*	4.02 *102*	2.76 *70*	0.945 *24*	30.118 *3*	0.63 *16*	4-Φ0.472 *4-Φ12*	1.575 *40*	0.315 x 0.276 *8 x 7*	1.063 *27*	GE-A1
	300 *50*	96 *130*	F10	4.92 *125*	4.02 *102*	2.76 *70*	0.945 *24*	30.118 *3*	0.63 *16*	4-Φ0.472 *4-Φ12*	1.575 *40*	0.315 x 0.276 *8 x 7*	1.063 *27*	GE-A1
	600 *100*	133 *180*	F12	5.91 *150*	4.92 *125*	3.35 *85*	1.102 *28*	0.118 *3*	0.83 *21*	4-Φ0.551 *4-Φ14*	1.772 *45*	0.315 x 0.276 *8 x 7*	1.063 *27*	GE-A2
	900 *150*	177 *240*	F12	5.91 *150*	4.92 *125*	3.35 *85*	1.102 *28*	0.118 *3*	0.83 *21*	4-Φ0.551 *4-Φ14*	1.772 *45*	0.315 x 0.276 *8 x 7*	1.063 *27*	GE-A2
	1500 *250*	221 *300*	F14	6.89 *175*	5.51 *140*	3.94 *100*	1.417 *36*	0.157 *4*	0.98 *25*	4-Φ0.709 *4-Φ18*	2.362 *60*	0.394 x 0.315 *10 x 8*	1.339 *34*	GE-A3
	2500 *420*	354 *480*	F16	8.27 *210*	6.5 *165*	5.12 *130*	1.575 *40*	0.197 *5*	1.18 *30*	4-Φ0.866 *4-Φ22*	2.362 *60*	0.472 x 0.315 *12 x 8*	1.693 *43*	GE-A4
3 *80*	150 *20*	74 *100*	F10	4.92 *125*	4.02 *102*	2.76 *70*	0.945 *24*	0.118 *3*	0.87 *22*	4-Φ0.472 4-Φ12	1.575 *40*	0.315 x 0.276 *8 x 7*	1.063 *27*	GE-A1
	300 *50*	96 *130*	F10	4.92 *125*	4.02 *102*	2.76 *70*	0.945 *24*	0.118 *3*	0.87 *22*	4-Φ0.472 *4-Φ12*	1.575 *40*	0.315 x 0.276 *8 x 7*	1.063 *27*	GE-A1
	600 *100*	148 *200*	F12	5.91 *150*	4.92 *125*	3.35 *85*	1.102 *28*	0.118 *3*	0.91 *23*	4-Φ0.551 *4-Φ14*	1.772 *45*	0.315 x 0.276 *8 x 7*	1.063 *27*	GE-A2
	900 *150*	207 *280*	F14	6.89 *175*	5.51 *140*	3.94 *100*	1.417 *36*	0.157 *4*	0.98 *25*	4-Φ0.709 *4-Φ18*	2.362 *60*	0.394 x 0.315 *10 x 8*	1.339 *34*	GE-A3
	1500 *250*	354 *480*	F14	6.89 *175*	5.51 *140*	3.94 *100*	1.575 *40*	0.157 *4*	1.14 *29*	4-Φ0.709 *4-Φ18*	2.362 *60*	0.472 x 0.315 *12 x 8*	1.693 *43*	GE-A3
	2500 *420*	443 *600*	F16	8.27 *210*	6.5 *165*	5.12 *130*	1.772 *45*	0.197 *5*	1.18 *30*	4-Φ0.866 *4-Φ22*	2.756 *70*	0.551 x 0.354 *14 x 9*	1.949 *49.5*	GE-A4
4 *100*	150 *20*	89 *120*	F12	5.91 *150*	4.92 *125*	3.35 *85*	1.102 *28*	0.118 *3*	0.91 *23*	4-Φ0.551 *4-Φ14*	1.772 *45*	0.315 x 0.276 *8 x 7*	1.063 *27*	GE-A2
	300 *50*	133 *180*	F12	5.91 *150*	4.92 *125*	3.35 *85*	1.102 *28*	0.118 *3*	0.91 *23*	4-Φ0.551 *4-Φ14*	1.772 *45*	0.315 x 0.276 *8 x 7*	1.063 *27*	GE-A2
	600 *100*	207 *280*	F14	6.89 *175*	5.51 *140*	3.94 *100*	1.417 *36*	0.157 *4*	0.98 *25*	4-Φ0.709 *4-Φ18*	2.362 *60*	0.394 x 0.315 *10 x 8*	1.339 *34*	GE-A3
	900 *150*	369 *500*	F14	6.89 *175*	5.51 *140*	3.94 *100*	1.417 *36*	0.157 *4*	0.98 *25*	4-Φ0.709 *4-Φ18*	2.362 *60*	0.394 x 0.315 *10 x 8*	1.339 *34*	GE-A3
	1500 *250*	590 *800*	F16	8.27 *210*	6.5 *165*	5.12 *130*	1.772 *45*	0.197 *5*	1.18 *30*	4-Φ0.866 *4-Φ22*	2.756 *70*	0.551 x 0.354 *14 x 9*	1.949 *49.5*	GE-A4
	2500 *420*	1475 *2000*	F16	8.27 *210*	6.5 *165*	5.12 *130*	1.969 *50*	0.197 *5*	1.18 *30*	4-Φ0.866 *4-Φ22*	2.756 *70*	0.551 x 0.354 *14 x 9*	2.244 *57*	GE-A5

Note:

(1) Torque doesn't include safety factor. The torque is based on seats of PTFE/RPTFE (Class 150 – 300), Nylon (Class 900 – 1500), and PEEK (Class 2500). Torque shall be as follows if other than the base seat material is selected:

PTFE/RPTFE	Nylon	Devlon	PCTFE	TFM	Delrin	Molon	PPL	PEEK	Metal
Base	x 1	x 1	x 0.8	X 0.8	x 1	X 1	X 0.8	x 1.3	x 2.2

(2) Number of bolt holes and bolt hole diameter.

TOP MOUNTING DIMENSIONS AND TORQUE (CONT'D)

NPS 6-10 (DN 150-300)

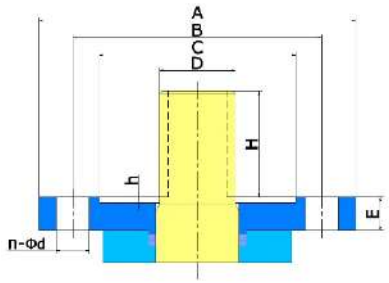

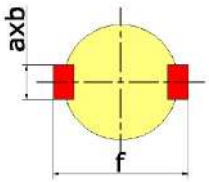

Size *in/mm*	Rating *Class/PN*	Torque[1] *ft-Lb/N-m*	ISO F#	A	B	C	D	h	E	n-Φd[2]	H	Drive Key a x b	f	Gearbox Model
6 *150*	150 *20*	369 *500*	F16	8.27 *210*	6.5 *165*	5.12 *130*	1.417 *36*	0.197 *5*	0.984 *25*	4-Φ0.866 *4-Φ22*	2.756 *70*	0.551 x 0.315 *10 x 8*	1.339 *34*	GE-A3
	300 *50*	516 *700*	F16	8.27 *210*	6.5 *165*	5.12 *130*	1.417 *36*	0.197 *5*	0.984 *25*	4-Φ0.866 *4-Φ22*	2.756 *70*	0.551 x 0.315 *10 x 8*	1.339 *34*	GE-A3
	600 *100*	811 *1100*	F16	8.27 *210*	6.5 *165*	5.12 *130*	1.772 *45*	0.197 *5*	1.181 *30*	4-Φ0.866 *4-Φ22*	2.756 *70*	0.551 x 0.354 *14 x 9*	1.949 *49.5*	GE-A4
	900 *150*	1549 *2100*	F16	8.27 *210*	6.5 *165*	5.12 *130*	1.969 *50*	0.197 *5*	1.181 *30*	4-Φ0.866 *4-Φ22*	2.756 *70*	0.551 x 0.354 *14 x 9*	2.244 *57*	GE-A5
	1500 *250*	2213 *3000*	F16	8.27 *210*	6.5 *165*	5.12 *130*	2.165 *55*	0.197 *5*	1.181 *30*	4-Φ0.866 *4-Φ22*	3.15 *80*	0.63 x 0.394 *16 x 10*	2.48 *63*	GE-A6
	2500 *420*	3688 *5000*	F25	11.81 *300*	10 *254*	7.87 *200*	2.559 *65*	0.197 *5*	1.378 *35*	4-Φ0.709 *4-Φ18*	3.543 *90*	0.709 x 0.433 *18 x 11*	2.874 *73*	GE-A9
8 *200*	150 *20*	443 *600*	F16	8.27 *210*	6.5 *165*	5.12 *130*	1.772 *45*	0.197 *5*	1.181 *30*	4-Φ0.866 *4-Φ22*	2.756 *70*	0.551 x 0.354 *14 x 9*	1.949 *49.5*	GE-A4
	300 *50*	811 *1100*	F16	8.27 *210*	6.5 *165*	5.12 *130*	1.772 *45*	0.197 *5*	1.181 *30*	4-Φ0.866 *4-Φ22*	2.756 *70*	0.551 x 0.354 *14 x 9*	1.949 *49.5*	GE-A4
	600 *100*	1401 *1900*	F16	8.27 *210*	6.5 *165*	5.12 *130*	1.969 *50*	0.197 *5*	1.181 *30*	4-Φ0.866 *4-Φ22*	2.756 *70*	0.551 x 0.354 *14 x 9*	2.244 *57*	GE-A6
	900 *150*	2581 *3500*	F25	11.81 *300*	10 *254*	7.87 *200*	2.165 *55*	0.197 *5*	1.181 *30*	8-Φ0.709 *8-Φ18*	3.15 *80*	0.63 x 0.394 *16 x 10*	2.48 *63*	GE-A8
	1500 *250*	4794 *6500*	F25	11.81 *300*	10 *254*	7.87 *200*	2.756 *70*	0.197 *5*	1.496 *38*	8-Φ0.709 *8-Φ18*	3.937 *100*	0.787 x 0.472 *20 x 12*	3.11 *79*	GE-B1
	2500 *420*	6269 *8500*	F30	13.78 *350*	11.73 *298*	9.06 *230*	3.543 *90*	0.197 *5*	1.496 *38*	8-Φ0.866 *8-Φ22*	4.724 *120*	0.984 x 0.551 *25 x 14*	3.937 *100*	GE-B2
10 *250*	150 *20*	738 *1000*	F16	8.27 *210*	6.5 *165*	5.12 *130*	1.969 *50*	0.197 *5*	1.063 *27*	4-Φ0.866 *4-Φ22*	2.756 *70*	0.551 x 0.354 *14 x 9*	2.244 *57*	GE-A5
	300 *50*	1475 *2000*	F16	8.27 *210*	6.5 *165*	5.12 *130*	1.969 *50*	0.197 *5*	1.063 *27*	4-Φ0.866 *4-Φ22*	2.756 *70*	0.551 x 0.354 *14 x 9*	2.244 *57*	GE-A5
	600 *100*	2581 *3500*	F25	11.81 *300*	10 *254*	7.87 *200*	2.559 *65*	0.197 *5*	1.260 *32*	8-Φ0.709 *8-Φ18*	3.543 *90*	0.709 x 0.433 *18 x 11*	2.874 *73*	GE-A8
	900 *150*	4057 *5500*	F25	11.81 *300*	10 *254*	7.87 *200*	2.756 *70*	0.197 *5*	1.417 *36*	8-Φ0.709 *8-Φ18*	3.937 *100*	0.787 x 0.472 *20 x 12*	3.11 *79*	GE-A9
	1500 *250*	7744 *10500*	F30	13.78 *350*	11.73 *298*	9.06 *230*	3.543 *90*	0.197 *5*	1.496 *38*	8-Φ0.866 *8-Φ22*	4.724 *120*	0.984 x 0.551 *25 x 14*	3.937 *100*	GE-B3
	2500 *420*	16226 *22000*	F35	16.34 *415*	14.02 *356*	10.24 *260*	3.937 *100*	0.197 *5*	1.575 *40*	8-Φ1.299 *8-Φ33*	5.512 *140*	1.102 x 0.63 *28 x 16*	4.409 *112*	GE-B5
12 *300*	150 *20*	1106 *1500*	F25	11.81 *300*	10 *254*	7.87 *200*	2.362 *60*	0.197 *5*	1.378 *35*	8-Φ0.709 *8-Φ18*	3.15 *80*	0.709 x 0.433 *18 x 11*	2.677 *68*	GE-A7
	300 *50*	2065 *2800*	F25	11.81 *300*	10 *254*	7.87 *200*	2.362 *60*	0.197 *5*	1.378 *35*	8-Φ0.709 *8-Φ18*	3.15 *80*	0.709 x 0.433 *18 x 11*	2.677 *68*	GE-A8
	600 *100*	4057 *5500*	F25	11.81 *300*	10 *254*	7.87 *200*	2.756 *70*	0.197 *5*	1.378 *35*	8-Φ0.709 *8-Φ18*	3.937 *100*	0.787 x 0.472 *20 x 12*	3.11 *79*	GE-A9
	900 *150*	6491 *8800*	F30	13.78 *350*	11.73 *298*	9.06 *230*	3.543 *90*	0.197 *5*	1.496 *38*	8-Φ0.866 *8-Φ22*	4.724 *120*	0.984 x 0.551 *25 x 14*	3.937 *100*	GE-B2
	1500 *250*	11801 *16000*	F35	16.34 *415*	10.24 *260*	14.02 *356*	3.937 *100*	0.197 *5*	1.575 *40*	8-Φ1.299 *8-Φ33*	5.512 *140*	1.102 x 0.63 *28 x 16*	4.409 *112*	GE-B4
	2500 *420*	18070 *24500*	F35	16.34 *415*	10.24 *260*	1402 *356*	3.937 *100*	0.197 *5*	1.575 *40*	8-Φ1.299 *8-Φ33*	5.512 *140*	1.102 x 0.63 *28 x 16*	4.409 *112*	GE-C3

Note:

(1) Torque doesn't include safety factor. The torque is based on seats of PTFE/RPTFE (Class 150 – 300), Nylon (Class 900 – 1500), and PEEK (Class 2500). Torque shall be as follows if other than the base seat material is selected:

PTFE/RPTFE	Nylon	Devlon	PCTFE	TFM	Delrin	Molon	PPL	PEEK	Metal
Base	x 1	x 1	x 0.8	X 0.8	x 1	X 1	X 0.8	x 1.3	x 2.2

(2) Number of bolt holes and bolt hole diameter.

TOP MOUNTING DIMENSIONS AND TORQUE (CONT'D)

NPS 14-24 (DN 350-600)

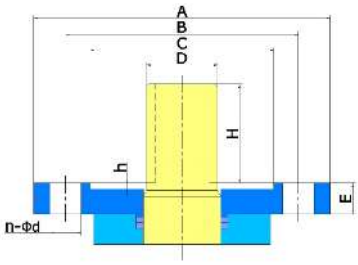

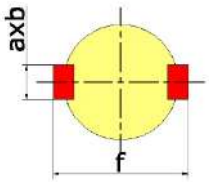

Size *in/mm*	Rating *Class/PN*	Torque[1] ft-lb/N-m	ISO F#	A	B	C	D	h	E	n-Φd[2]	H	Drive Key a x b	f	Gearbox Model
14 *350*	150 *20*	1328 *1800*	F25	11.81 *300*	10 *254*	7.87 *200*	2.559 *65*	0.197 *5*	1.299 *33*	8-Φ0.709 *8-Φ18*	3.543 *90*	0.709 x 0.433 *18 x 11*	2.874 *73*	GE-A7
	300 *50*	2655 *3600*	F25	11.81 *300*	10 *254*	7.87 *200*	2.559 *65*	0.197 *5*	1.299 *33*	8-Φ0.709 *8-Φ18*	3.543 *90*	0.709 x 0.433 *18 x 11*	2.874 *73*	GE-A9
	600 *100*	5163 *7000*	F25	11.81 *300*	10 *254*	7.87 *200*	3.15 *80*	0.197 *5*	1.378 *35*	8-Φ0.709 *8-Φ18*	4.724 *120*	0.866 x 0.551 *22 x 14*	3.543 *90*	GE-B1
	900 *150*	8998 *12200*	F30	13.78 *350*	11.73 *298*	9.06 *230*	3.937 *100*	0.197 *5*	1.378 *35*	8-Φ0.866 *8-Φ22*	5.512 *140*	1.102 x 0.63 *28 x 16*	4.409 *112*	GE-B3
	1500 *250*	13276 *18000*	F35	16.34 *415*	14.02 *356*	10.24 *260*	3.937 *100*	0.197 *5*	1.575 *40*	8-Φ1.299 *8-Φ33*	5.512 *140*	1.102 x 0.63 *28 x 16*	4.409 *112*	GE-B5
16 *400*	150 *20*	2508 *3400*	F25	11.81 *300*	10 *254*	7.78 *200*	3.15 *80*	0.197 *5*	1.378 *35*	8-Φ0.709 *8-Φ18*	4.724 *120*	0.866 x 0.551 *22 x 14*	3.543 *90*	GE-A8
	300 *50*	4720 *6400*	F25	11.81 *300*	10 *254*	7.78 *200*	3.15 *80*	0.197 *5*	1.378 *35*	8-Φ0.709 *8-Φ18*	4.724 *120*	0.866 x 0.551 *22 x 14*	3.543 *90*	GE-A9
	600 *100*	8113 *11000*	F30	13.78 *350*	11.73 *298*	9.06 *230*	3.937 *100*	0.197 *5*	1.378 *35*	8-Φ0.866 *8-Φ22*	5.512 *140*	1.102 x 0.63 *28 x 16*	4.409 *112*	GE-B3
	900 *150*	11432 *15500*	F35	16.34 *415*	14.02 *356*	10.24 *260*	3.937 *100*	0.197 *5*	1.575 *40*	8-Φ1.299 *8-Φ33*	5.512 *140*	1.102 x 0.63 *28 x 16*	4.409 *112*	GE-B4
	1500 *250*	18439 *25000*	F40	18.7 *475*	15.98 *406*	11.81 *300*	34.724 *120*	0.315 *8*	1.772 *45*	8-Φ1.535 *8-Φ39*	6.299 *160*	1.26 x 0.709 *32 x 18*	5.276 *134*	GE-C5
18 *450*	150 *20*	2950 *4000*	F25	11.81 *300*	10 *254*	7.87 *200*	3.15 *80*	0.197 *5*	1.378 *35*	8-Φ0.709 *8-Φ18*	4.724 *120*	0.866 x 0.551 *22 x 14*	3.543 *90*	GE-A9
	300 *50*	5532 *7500*	F25	11.81 *300*	10 *254*	7.87 *200*	3.15 *80*	0.197 *5*	1.378 *35*	8-Φ0.709 *8-Φ18*	4.724 *120*	0.866 x 0.551 *22 x 14*	3.543 *90*	GE-A9
	600 *100*	11063 *15000*	F35	16.34 *415*	14.02 *356*	10.24 *260*	3.937 *100*	0.197 *5*	1.575 *40*	8-Φ1.299 *8-Φ33*	5.512 *140*	1.102 x 0.63 *28 x 16*	4.409 *112*	GE-B4
	900 *150*	16226 *22000*	F35	16.34 *415*	14.02 *356*	10.24 *260*	4.724 *120*	0.197 *5*	1.575 *40*	8-Φ1.299 *8-Φ33*	6.299 *160*	1.26 x 0.709 *32 x 18*	5.276 *134*	GE-B5
	1500 *250*	26552 *36000*	F40	18.7 *475*	15.98 *406*	11.81 *300*	5.512 *140*	0.315 *8*	1.772 *45*	8-Φ1.535 *8-Φ39*	6.693 *170*	1.417 x 0.787 *36 x 20*	6.142 *156*	GE-B6
20 *500*	150 *20*	3319 *4500*	F30	13.78 *350*	11.73 *298*	9.06 *230*	3.543 *90*	0.197 *5*	1.496 *38*	8-Φ0.866 *8-Φ22*	4.724 *120*	0.984 x 0.551 *25 x 14*	3.937 *100*	GE-B2
	300 *50*	7007 *9500*	F30	13.78 *350*	11.73 *298*	9.06 *230*	3.543 *90*	0.197 *5*	1.496 *38*	8-Φ0.866 *8-Φ22*	4.724 *120*	0.984 x 0.551 *25 x 14*	3.937 *100*	GE-B3
	600 *100*	14014 *19000*	F35	16.34 *415*	14.02 *356*	10.24 *260*	3.937 *100*	0.197 *5*	1.575 *40*	8-Φ1.299 *8-Φ33*	5.512 *140*	1.102 x 0.63 *28 x 16*	4.409 *112*	GE-B5
	900 *150*	22864 *31000*	F40	18.7 *475*	15.98 *406*	11.81 *300*	4.724 *120*	0.315 *8*	1.772 *45*	8-Φ1.535 *8-Φ39*	6.299 *160*	1.26 x 0.709 *32 x 18*	5.276 *134*	GE-B6
	1500 *250*	35624 *48300*	F48	22.05 *560*	19.02 *483*	14.57 *370*	5.512 *140*	0.315 *8*	1.772 *45*	12-Φ1.535 *12-Φ39*	6.693 *170*	1.417 x 0.787 *36 x 20*	6.142 *156*	GE-B7
24 *600*	150 *20*	5900 *8000*	F35	16.34 *415*	14.02 *356*	10.24 *260*	3.937 *100*	0.197 *5*	1.575 *40*	8-Φ1.299 *8-Φ33*	5.512 *140*	1.102 x 0.63 *28 x 16*	4.409 *112*	GE-B4
	300 *50*	12907 *17500*	F35	16.34 *415*	14.02 *356*	10.24 *260*	3.937 *100*	0.197 *5*	1.575 *40*	8-Φ1.299 *8-Φ33*	5.512 *140*	1.102 x 0.63 *28 x 16*	4.409 *112*	GE-B4
	600 *100*	23602 *32000*	F40	18.7 *475*	15.98 *406*	11.81 *300*	4.724 *120*	0.315 *8*	1.772 *45*	8-Φ1.535 *8-Φ39*	6.299 *160*	1.26 x 0.709 *32 x 18*	5.276 *134*	GE-B6
	900 *150*	36878 *50000*	F48	22.05 *560*	19.02 *483*	14.57 *370*	5.512 *140*	0.315 *8*	1.772 *45*	12-Φ1.535 *12-Φ39*	6.693 *170*	1.417 x 0.787 *36 x 20*	6.142 *156*	GE-B7
	1500 *250*	66380 *90000*	F60	27.01 *686*	23.74 *603*	18.5 *470*	6.299 *160*	0.315 *8*	2.362 *60*	20-Φ1.535 *20-Φ39*	7.48 *190*	1.575 x 0.866 *40 x 22*	7.008 *178*	GE-C7

Note:

(1) Torque doesn't include safety factor. The torque is based on seats of PTFE/RPTFE (Class 150 – 300), Nylon (Class 900 – 1500), and PEEK (Class 2500). Torque shall be as follows if other than the base seat material is selected:

PTFE/RPTFE	Nylon	Devlon	PCTFE	TFM	Delrin	Molon	PPL	PEEK	Metal
Base	x 1	x 1	x 0.8	X 0.8	x 1	X 1	X 0.8	x 1.3	x 2.2

(2) Number of bolt holes and bolt hole diameter.

TOP MOUNTING DIMENSIONS AND TORQUE (CONT'D)

NPS 26-40 (DN 650-1000)

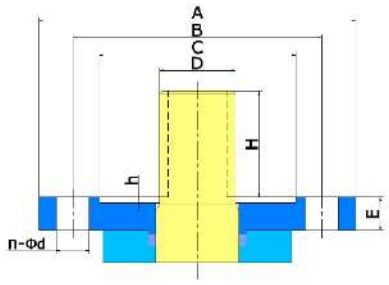

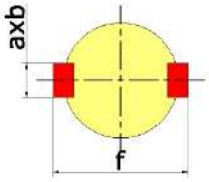

Size *in/mm*	Rating *Class/PN*	Torque[1] *ft-lb/N-m*	ISO F#	A	B	C	D	h	E	n-Φd[2]	H	Drive Key a x b	f	Gearbox Model
26 *650*	150 *20*	6269 *8500*	F35	16.34 *415*	14.02 *356*	10.24 *260*	3.937 *100*	0.197 *5*	1.575 *40*	8-Φ1.299 *8-Φ33*	5.512 *140*	1.102 x 0.63 *28 x 16*	4.409 *112*	GE-B4
	300 *50*	13276 *18000*	F35	16.34 *415*	14.02 *356*	10.24 *260*	3.937 *100*	0.197 *5*	1.575 *40*	8-Φ1.299 *8-Φ33*	5.512 *140*	1.102 x 0.63 *28 x 16*	4.409 *112*	GE-B5
	600 *100*	25077 *34000*	F40	18.7 *475*	15.98 *406*	11.81 *300*	4.724 *120*	0.315 *8*	1.772 *45*	8-Φ1.535 *8-Φ39*	6.299 *160*	1.26 x 0.709 *32 x 18*	5.276 *134*	GE-B6
	900 *150*	42041 *57000*	F48	22.05 *560*	19.02 *483*	14.57 *370*	5.512 *140*	0.315 *8*	1.772 *45*	12-Φ1.535 *12-Φ39*	6.693 *170*	1.417 x 0.787 *36 x 20*	6.142 *156*	GE-B7
28 *700*	150 *20*	6638 *9000*	F35	16.34 *415*	14.02 *356*	10.24 *260*	3.937 *100*	0.197 *5*	1.575 *40*	8-Φ1.299 *8-Φ33*	5.512 *140*	1.102 x 0.63 *28 x 16*	4.409 *112*	GE-B4
	300 *50*	16226 *22000*	F35	16.34 *415*	14.02 *356*	10.24 *260*	3.937 *100*	0.197 *5*	1.575 *40*	8-Φ1.299 *8-Φ33*	5.512 *140*	1.102 x 0.63 *28 x 16*	4.409 *112*	GE-B5
	600 *100*	30978 *42000*	F48	22.05 *560*	19.02 *483*	14.57 *370*	5.512 *140*	0.315 *8*	1.772 *45*	12-Φ1.535 *12-Φ39*	6.693 *170*	1.417 x 0.787 *36 x 20*	6.142 *156*	GE-B7
	900 *150*	46465 *63000*	F48	22.05 *560*	19.02 *483*	14.57 *370*	5.512 *140*	0.315 *8*	1.772 *45*	12-Φ1.535 *12-Φ39*	6.693 *170*	1.417 x 0.787 *36 x 20*	6.142 *156*	GE-B7
30 *750*	150 *20*	8851 *12000*	F35	16.34 *415*	14.02 *356*	10.24 *260*	3.937 *100*	0.197 *5*	1.575 *40*	8-Φ1.299 *8-Φ33*	5.512 *140*	1.102 x 0.63 *28 x 16*	4.409 *112*	GE-B4
	300 *50*	19914 *27000*	F40	18.7 *475*	15.98 *406*	11.81 *300*	4.724 *120*	0.315 *8*	1.772 *45*	8-Φ1.535 *8-Φ39*	6.299 *160*	1.26 x 0.709 *32 x 18*	5.276 *134*	GE-B6
	600 *100*	37616 *51000*	F48	22.05 *560*	19.02 *483*	14.57 *370*	5.512 *140*	0.315 *8*	1.772 *45*	12-Φ1.535 *12-Φ39*	6.693 *170*	1.417 x 0.787 *36 x 20*	6.142 *156*	GE-C5
	900 *150*	55317 *75000*	F48	22.05 *560*	19.02 *483*	14.57 *370*	6.299 *160*	0.315 *8*	1.969 *50*	12-Φ1.535 *12-Φ39*	7.48 *190*	1.575 x 0.866 *40 x 22*	7.008 *178*	GE-B7
32 *800*	150 *20*	9957 *13500*	F35	16.34 *415*	14.02 *356*	10.24 *260*	4.724 *120*	0.197 *5*	1.575 *40*	8-Φ1.299 *8-Φ33*	6.299 *160*	1.26 x 0.709 *32 x 18*	5.276 *134*	GE-B5
	300 *50*	22864 *31000*	F40	18.7 *475*	15.98 *406*	11.81 *300*	4.724 *120*	0.315 *8*	1.772 *45*	8-Φ1.535 *8-Φ39*	6.299 *160*	1.26 x 0.709 *32 x 18*	5.276 *134*	GE-B6
	600 *100*	44254 *60000*	F48	22.05 *560*	19.02 *483*	14.57 *370*	5.512 *140*	0.315 *8*	1.772 *45*	12-Φ1.535 *12-Φ39*	6.693 *170*	1.417 x 0.787 *36 x 20*	6.142 *156*	GE-C5
34 *850*	150 *20*	11432 *15500*	F35	16.34 *415*	14.02 *356*	10.24 *260*	4.724 *120*	0.197 *5*	1.575 *40*	8-Φ1.299 *8-Φ33*	6.299 *160*	1.26 x 0.709 *32 x 18*	5.276 *134*	GE-B5
	300 *50*	26921 *36500*	F40	18.7 *475*	15.98 *406*	11.81 *300*	5.512 *140*	0.315 *8*	1.772 *45*	8-Φ1.535 *8-Φ39*	6.693 *170*	1.417 x 0.787 *36 x 20*	6.142 *156*	GE-B6
	600 *100*	51629 *70000*	F48	22.05 *560*	19.02 *483*	14.57 *370*	6.299 *160*	0.315 *8*	1.969 *50*	12-Φ1.535 *12-Φ39*	7.48 *190*	1.575 x 0.866 *40 x 22*	7.008 *178*	GE-B7
36 *900*	150 *20*	12539 *17000*	F35	16.34 *415*	14.02 *356*	10.24 *260*	4.724 *120*	0.197 *5*	1.575 *40*	8-Φ1.299 *8-Φ33*	6.299 *160*	1.26 x 0.709 *32 x 18*	5.276 *134*	GE-B5
	300 *50*	28765 *39000*	F40	18.7 *475*	15.98 *406*	11.81 *300*	5.512 *140*	0.315 *8*	1.772 *45*	8-Φ1.535 *8-Φ39*	6.693 *170*	1.417 x 0.787 *36 x 20*	6.142 *156*	GE-B6
	600 *100*	56055 *76000*	F48	22.05 *560*	19.02 *483*	14.57 *370*	6.299 *160*	0.315 *8*	1.969 *50*	12-Φ1.535 *12-Φ39*	7.48 *190*	1.575 x 0.866 *40 x 22*	7.008 *178*	GE-B7
40 *1000*	150 *20*	18439 *25000*	F40	18.7 *475*	15.98 *406*	11.81 *300*	7.724 *120*	0.315 *8*	1.772 *45*	8-Φ1.535 *8-Φ39*	6.299 *160*	1.26 x 0.709 *32 x 18*	5.276 *134*	GE-B6
	300 *50*	36878 *50000*	F48	22.05 *560*	19.02 *483*	14.57 *370*	5.512 *140*	0.315 *8*	1.969 *50*	12-Φ1.535 *12-Φ39*	6.693 *170*	1.417 x 0.787 *36 x 20*	6.142 *156*	GE-C5
	600 *100*	66380 *90000*	F60	27.01 *686*	23.74 *603*	18.5 *470*	6.299 *160*	0.315 *8*	2.362 *60*	20-Φ1.535 *20-Φ39*	7.48 *190*	1.575 x 0.866 *40 x 22*	7.008 *178*	GE-C7

Note:

(1) Torque doesn't include safety factor. The torque is based on seats of PTFE/RPTFE (Class 150 – 300), Nylon (Class 900 – 1500), and PEEK (Class 2500). Torque shall be as follows if other than the base seat material is selected:

PTFE/RPTFE	Nylon	Devlon	PCTFE	TFM	Delrin	Molon	PPL	PEEK	Metal
Base	x 1	x 1	x 0.8	X 0.8	x 1	X 1	X 0.8	x 1.3	x 2.2

(2) Number of bolt holes and bolt hole diameter.

TOP MOUNTING DIMENSIONS AND TORQUE (CONT'D) NPS 42-56 (DN 1050-1400)

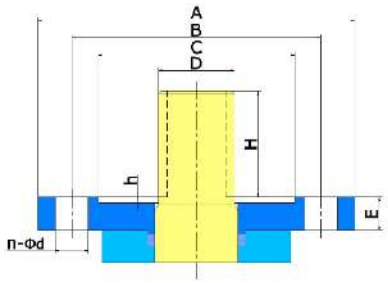

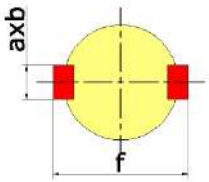

Size *in/mm*	Rating *Class/PN*	Torque[1] *ft-lb/N-m*	ISO F#	A	B	C	D	h	E	n-Φd[2]	H	Drive Key a x b	f	Gearbox Model
42 *1050*	150 *20*	20652 *28000*	F40	18.7 *475*	15.98 *406*	11.81 *300*	4.724 *120*	0.315 *8*	1.772 *45*	8-Φ1.535 *8-Φ39*	6.299 *160*	1.26 x 0.709 *32 x 18*	5.276 *134*	GE-B6
	300 *50*	40566 *55000*	F48	22.05 *560*	19.02 *483*	14.57 *370*	5.512 *140*	0.315 *8*	1.969 *50*	12-Φ1.535 *12-Φ39*	6.693 *170*	1.417 x 0.787 *36 x 20*	6.142 *156*	GE-B7
	600 *100*	81132 *110000*	F60	27.01 *686*	23.74 *603*	18.5 *470*	6.299 *160*	0.315 *8*	2.362 *60*	20-Φ1.535 *20-Φ39*	7.48 *190*	1.575 x 0.866 *40 x 22*	7.008 *178*	GE-C7
48 *1200*	150 *20*	33190 *45000*	F40	18.7 *475*	15.98 *406*	11.81 *300*	5.512 *140*	0.315 *8*	1.772 *45*	8-Φ1.535 *8-Φ39*	6.693 *170*	1.417 x 0.787 *36 x 20*	6.142 *156*	GE-C5
	300 *50*	66380 *90000*	F60	27.01 *686*	23.74 *603*	18.5 *470*	6.299 *160*	0.315 *8*	2.362 *60*	20-Φ1.535 *20-Φ39*	7.48 *190*	1.575 x 0.866 *40 x 22*	7.008 *178*	GE-C7
	600 *100*	125385 *170000*	F60	27.01 *686*	23.74 *603*	18.5 *470*	7.874 *200*	0.315 *8*	2.362 *60*	20-Φ1.535 *20-Φ39*	9.25 *235*	1.772 x 0.984 *45 x 25*	8.661 *220*	(3)
56 *1400*	150 *20*	40566 *55000*	F48	22.05 *560*	19.02 *483*	14.57 *370*	6.299 *160*	0.315 *8*	1.969 *50*	12-Φ1.535 *12-Φ39*	7.48 *190*	1.575 x 0.866 *40 x 22*	7.008 *178*	GE-B7
	300 *50*	92195 *125000*	F60	27.01 *686*	23.74 *603*	18.5 *470*	7.087 *180*	0.315 *8*	2.165 *55*	20-Φ1.535 *20-Φ39*	8.661 *220*	1.772 x 0.984 *45 x 25*	7.874 *200*	GE-C7
	600 *100*	177014 *240000*	F60	27.01 *686*	23.74 *603*	18.5 *470*	7.874 *200*	0.315 *8*	2.362 *60*	20-Φ1.535 *20-Φ39*	9.252 *235*	1.772 x 0.984 *45 x 25*	8.661 *220*	(3)

Note:
(1) Torque doesn't include safety factor. The torque is based on seats of PTFE/RPTFE (Class 150 – 300), Nylon (Class 900 – 1500), and PEEK (Class 2500). Torque shall be as follows if other than the base seat material is selected:

PTFE/RPTFE	Nylon	Devlon	PCTFE	TFM	Delrin	Molon	PPL	PEEK	Metal
Base	x 1	x 1	x 0.8	X 0.8	x 1	X 1	X 0.8	x 1.3	x 2.2

(2) Number of bolt holes and bolt hole diameter.
(3) Please consult our sales representative for gearbox selection.

GEAR OPERATORS

DIMENSIONS AND WEIGHTS

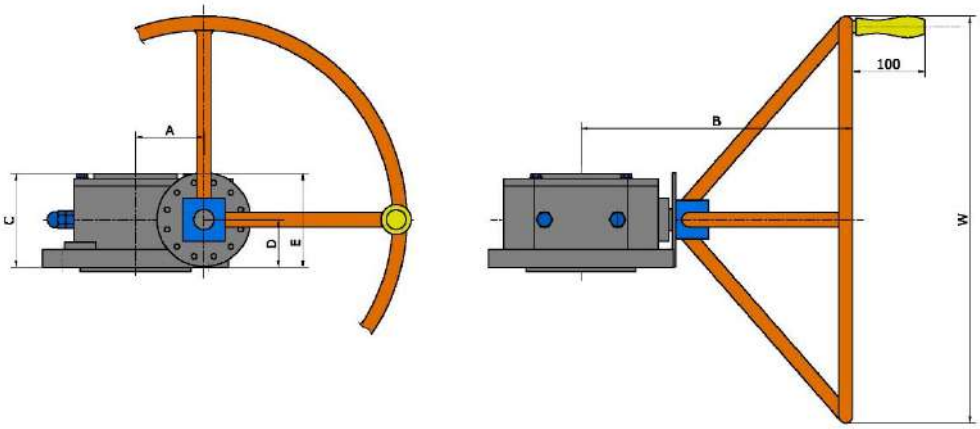

Gearbox Model	ISO F#	A	B	C	D	E	W	Gear Ratio	Weight *lb/kg*	Input Torque *ft-lb/N-m*	Output Torque *ft-lb/N-m*
GE-A1	F10	2.5 *63*	8.4 *214*	2.4 *60*	1.3 *33*	2.8 *72*	13.8 *350*	38:1	18 *8*	59 *80*	406 *550*
GE-A2	F12	3 *75*	8.8 *223*	3 *75*	1.6 *40*	3.4 *87*	13.8 *350*	54:1	24 *11*	66 *90*	701 *950*
GE-A3	F14	3.4 *87*	9.3 *236*	3.5 *90*	2.1 *54*	4.2 *106*	13.8 *350*	50:1	33 *15*	92 *125*	959 *1300*
GE-A4	F16	4.1 *105*	9.3 *236*	3.5 *90*	2.1 *54*	4.2 *106*	13.8 *350*	50:1	37 *17*	92 *125*	959 *1300*
GE-A5	F16	4.1 *105*	12.2 *310*	3.5 *90*	2.1 *54*	4.2 *106*	18.1 *460*	72:1	55 *25*	122 *165*	1623 *2200*
GE-A6	F16	4.1 *105*	14.8 *375*	3.7 *95*	2.1 *54*	4.4 *112*	23.6 *600*	68:1	88 *40*	144 *195*	2360 *3200*
GE-A7	F25	5.9 *150*	14.8 *375*	3.7 *95*	2.1 *54*	4.4 *112*	23.6 *600*	68:1	106 *48*	144 *195*	2360 *3200*
GE-A8	F25	5.9 *150*	16.9 *430*	5.3 *135*	7.1 *180*	6 *153*	23.6 *600*	85:1	179 *81*	144 *195*	3098 *4200*
GE-A9	F25	5.9 *150*	20.1 *510*	5.3 *135*	7.1 *180*	6 *153*	23.6 *600*	200:1	198 *90*	144 *195*	5310 *7200*
GE-B1	F25	6.1 *155*	20.9 *532*	5.5 *140*	3 *77*	6.5 *166*	23.6 *600*	275:1	229 *104*	144 *195*	7449 *10100*
GE-B2	F30	6.1 *155*	20.9 *532*	5.5 *140*	3 *77*	6.5 *166*	23.6 *600*	275:1	229 *104*	144 *195*	7449 *10100*
GE-B3	F30	6.8 *172*	21.9 *557*	5.7 *145*	2.9 *74*	6.6 *168*	23.6 *600*	433:1	278 *126*	144 *195*	10695 *14500*
GE-B4	F35	8.1 *207*	22.8 *579*	6.5 *165*	3.3 *84*	7.5 *190*	23.6 *600*	518:1	348 *158*	144 *195*	13719 *18600*
GE-B5	F35	8.3 *212*	25.2 *641*	6.5 *165*	3.4 *87*	7.2 *183*	23.6 *600*	664:1	459 *208*	144 *195*	18070 *24500*
GE-B6	F40	10.4 *265*	29.3 *744*	8.1 *205*	4.3 *109*	8.9 *225*	23.6 *600*	1281:1	725 *329*	144 *195*	31346 *42500*
GE-B7	F48	11 *280*	33.3 *847*	8.9 *225*	4.8 *122*	9.7 *247*	27.6 *700*	1840:1	1213 *550*	177 *240*	62471 *84700*
GE-C1	F30	7.2 *183*	26.8 *680*	5.3 *135*	2.7 *68*	6 *152*	15.7 *400*	372:1	311 *141*	144 *195*	11063 *15000*
GE-C2	F30	7.2 *183*	28.7 *728*	5.3 *135*	2.7 *68*	6 *152*	15.7 *400*	955:1	322 *146*	92 *125*	16226 *22000*
GE-C3	F35	8.5 *216*	28.4 *721*	5.9 *150*	2.3 *82*	7.3 *185*	19.7 *500*	402;1	573 *260*	162x2 *220x2*(1)	327450 *37000*
GE-C4	F35	8.5 *216*	29.1 *738*	5.9 *150*	2.3 *82*	7.3 *185*	19.7 *500*	1032:1	423 *192*	162 *220*	30978 *42000*
GE-C5	F40	9.7 *247*	30.2 *768*	7.1 *180*	3.6 *91*	8 *203*	23.6 *600*	1232:1	529 *240*	162 *220*	38353 *52000*
GE-C6	F48	11.5 *292*	35.4 *898*	7.7 *195*	4.1 *103*	8.9 *226*	27.6 *700*	838:1	893 *405*	207x2 *280x2*(1)	62693 *85000*
GE-C7	F60	14.2 *360*	40.1 *1018*	10.2 *260*	5.3 *135*	11.9 *303*	35.4 *900*	1560:1	2555 *1159*	207x2 *280x2*(1)	118010 *160000*

Note:
(1) Requires 2 persons to operate.

SEAT AND SEAL MATERIAL

SELECTION GUIDE

Seat Material Pressure-Temperature Rating (Operating)

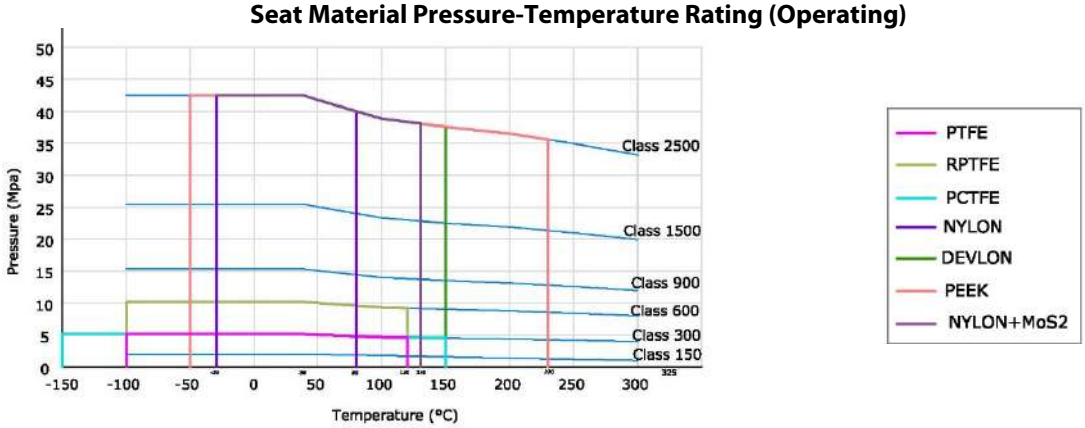

SEAT MATERIALS

Material Name	Description	Operating Temperature	Operating Pressure	Service Application
PTFE	Virgin PTFE is the most widely used sealing material with excellent characteristics suitable for most services. It has excellent chemical resistance throughout valve industries and low coefficient of frication.	-112°F – 248°F *-80°C– 120°C*	Class 150 – 300 *PN 20 – 50*	General chemicals, low pressure services.
RPTFE	RPTFE (Reinforced PTFE) is typically produced by adding 15% fiber glass to virgin PTFE. It has better pressure-temperature properties than virgin PTFE, better resistance to wear and deformation under load. **NOT to be used in hydrofluroic acid**	-112°F – 248°F *-80°C– 120°C*	Class 150 – 600 *PN 20 – 100*	For low and medium pressure services.
PCTFE	PCTFE is a homopolymer of chlorotrifluoroethylene, featuring high compressive strength and low deformation under load.	-320°F – 248°F -196°C– 120°C	Class 150 – 300 PN 20 – 50	For low temperature low pressure services.
Nylon 6	Nylon is a common seat material for Class 600 valves. It is highly resistance to many chemicals and abrasions, and can be used in air, oil and other gas media. **It is NOT suitable for strong oxidization agents.**	-22°F – 176°F *-30°C– 80°C*	Class 150 –2500 *PN 20 – 420*	For high pressure, low temperature services.
Devlon®	Devlon® is a high molecular weight polyamide that is specifically tailored for high temperature/pressure applications in the offshore oil and gas sector. It is low moisture absorption.	-50°F – 302°F *-46°C– 150°C*	Class 150 – 2500 *PN 20 – 420*	For high pressure high temperature offshore services.
Nylon+MoS2	Molon (Nylon+MoS2) is a modified Nylon, the characteristics are similar to Devlon with it is cheaper than Devlon.	-20°F – 266°F *-29°C– 130°C*	Class 150 – 1500 *PN 20 – 250*	For high pressure, low temperature services.
PEEK	PEEK is a high performance engineered thermoplastic. It is excellent in water/chemical resistance and it is unaffected by continuous exposure to hot water/steam	-148°F – 500°F *-100°C– 260°C*	Class 600 – 2500 *PN 100 – 420*	For high pressure high temperature services.
PPL	PPL (Polyparaphenylene) is an excellent seat material with low coefficient of friction, highly resistant to pressure and temperature.	-50°F – 482°F *-46°C– 250°C*	Class 150 – 300 *PN 20 – 50*	For high temperature low pressure services.
Delrin®	Delrin® (Acetal Resin) possesses high tensile strength, creep resistance and toughness. It exhibits low moisture absorption. It is chemically resistant to hydrocarbons, solvents and neutral chemicals. **DO NOT use it on oxygen service or steam.**	-50°F – 194°F *-46°C– 90°C*	Class 150 – 600 *PN 20 – 100*	For extreme pressure services.
TFM	TFM (modified PTFE) is a chemically modified PTFE that offers enhanced properties while retaining all the proven advantages of a conventional PTFE.	-112°F – 320°F *-80°C– 160°C*	Class 150 – 600 *PN 20 – 100*	For services requiring high purity.
Metal	Metal (typically stellite) seats are used in severe conditions where flashing, hydraulic shock, abrasive media or trapped metal may exist in the line.	Varies	Varies	For severe services.

O-RING MATERIALS

Material Name	Description	Operating Temperature	Operating Pressure
NBR	Buna-N (NBR) is an all purpose polymer with good resistance to water, solvents, oil and hydraulic fluids.	-50°F – 176°F *-46°C– 80°C*	Class 150 – 600 *PN 20 – 100*
HNBR	HNBR (Hydrogenated NBR) has similar media stability to NBR but with significantly better heat and oxidization stability.	-67°F – 338°F *-55°C– 170°C*	Class 150 – 600 *PN 20 – 100*
Viton	Viton (fluorocarbon) is a fluorocarbon elastomer that is compatible with a broad range of chemicals. It performs well in mineral acids, salt solutions, chlorinated hydrocarbons and petroleum oils	-20°F – 400°F *-29°C– 204°C*	Class 150 – 600 *PN 20 – 100*
EPDM	EPDM has good abrasion and tear resistance with excellent chemical resistance to a variety of acids and alkalines. It is susceptible to attack by oil, strong acids and strong alkalines and should not be used in compressed air lines.	-50°F – 302°F *-46°C– 150°C*	Class 150 – 600 *PN 20 – 100*
FVMQ	Fluorosilcione is a silicone polymer chain with fluorinated side-chains for improved oil and fuel resistance. The mechanical and physical properties are very similar to those of silicone.	-50°F – 350°F *-46°C– 177°C*	Class 150 – 600 *PN 20 – 100*
AFLAS®	AFLAS® is highly resistant to a wide range of chemicals	-49°F – 428°F *-29°C– 220°C*	Class 150 – 600 *PN 20 – 100*

FLOW COEFFICENT

SPECIFICATION TABLE

Nominal Size *in/mm*	Class 150 PN 20		Class 300 PN 50		Class 600 PN 100		Class 900 PN 150		Class 1500 PN 250	
	Cv	Kv	Cv	Kv	Cv	Kv	Cv	Kv	Cv	Kv
½ *15*	25	21	25	18	20	17	16	14	16	14
¾ *20*	56	48	56	40	4	3	34	29	34	29
1 *25*	95	81	95	69	64	54	55	47	55	47
1 ½ *40*	308	262	308	223	308	262	165	140	165	140
2 *50*	500	425	430	361	370	315	320	272	320	272
3 *80*	1,360	1,156	1,100	983	1,020	867	920	782	820	697
4 *100*	2,500	2,125	2,000	1,806	1,850	1,573	1,760	1,496	1,600	1,360
6 *150*	4,060	3,451	4,056	2,933	3,410	2,899	4,300	3,655	4,150	3,528
8 *200*	8,090	6,877	7,700	5,845	6,730	5,721	8,475	7,204	8,010	6,809
10 *250*	13,510	11,484	13,090	9,761	11,120	9,452	14,160	12,036	13,220	11,237
12 *300*	20,440	17,374	19,830	14,768	17,440	14,824	21,200	18,020	18,800	15,980
14 *350*	25,050	21,293	23,770	18,099	22,010	18,709	26,700	22,695	24,180	20,553
16 *400*	34,200	29,070	32,595	24,710	29,980	25,483	36,600	31,110	33,150	28,178
18 *450*	44,430	37,766	43,200	32,101	39,520	33,592	49,000	41,650	45,703	38,848
20 *500*	57,665	49,015	55,380	41,663	50,450	42,883	64,600	54,910	60,750	51,638
22 *550*	70,080	59,568	70,080	50,633	68,900	58,565				
24 *600*	87,680	74,528	84,720	63,349	76,630	65,136				
28 *700*	120,000	102,000	115,350	86,700	107,510	91,384				
30 *750*	141,850	120,573	136,600	102,487	125,630	106,786				
32 *800*	160,390	136,332	152,200	115,882	140,900	119,765				
36 *900*	205,450	174,633	192,995	148,438	239,160	203,286				
40 *1000*	248,700	211,395	248,700	179,686	239,160	203,286				
42 *1050*	275,260	233,971	275,260	198,875	275,260	233,971				
48 *1200*	364,180	309,553	364,180	263,120	364,180	309,553				
56 *1400*	529,430	450,016	529,430	382,513	520,500	442,425				

CALCULATION OF FLOW COEFFICIENT

Flow coefficient Cv (Kv is the metric equivalent) is the rate of flow in gallon per minute with the pressure drop of 1 psi across the valve. The flow coefficients shown in the above table are determined with equations as follows:

For liquids:

$$Q_l = C_v(\Delta P/SG)^{1/2}$$

Where:
Q_l = Flow of liquid (gallon/minute)
ΔP = Pressure drop in psi (P_1-P_2)
SG = Specific gravity (1 for liquid)

For gases (non-critical):

$$Q_g = 61 \cdot C_v(P_2 \cdot P_1 \,/\, SG)^{1/2}$$

Where:
Q_g = Flow of gases (SFH at STP)
P_2 = Outlet pressure (psi)
P_1 = Inlet pressure (psi)
SG = Specific gravity (1 for gas)

TRUNNION BALL VALVE

VALVE FIGURE NUMBER — *HOW TO ORDER*

	Nominal Size	Valve Type	Pressure Rating	End Conn.	Construct-ion	Body Material	Trim Material	Seat or Insert	O-ring	Operation Mode
	A	B	C	D	E	F	G	H	I	J
e.g.	1 6	B A	6	R	4	C 1	1 0	N	1	G

is a NPS 16 Class 600 trunnion ball valve, RF flanged, 3-piece split body, A105 body, SS316 trim, Nylon seat insert, Viton O-ring, gear operated.

A Nominal Size

00	Special	**02**	2 (DN 50)	**07**	8 RB	**19**	20 RB	**31**	32 RB
F1	3/8 (DN 10)	**R2**	2 RB	**08**	8 (DN 200)	**20**	20 (DN 500)	**32**	32 (DN 800)
F2	1/2 (DN 15)	**F6**	2 ½ (DN 65)	**09**	10 RB	**21**	22 RB	**33**	34 RB
0R	1/2 RB	**3R**	2 ½ RB	**10**	10 (DN 250)	**22**	22 (DN 550)	**34**	34 (DN 850)
F3	3/4 (DN 20)	**03**	3 (DN 80)	**11**	12 RB	**23**	24 RB	**35**	36 RB
R0	3/4 RB	**R3**	3 RB	**12**	12 (DN 300	**24**	24 (DN 600)	**36**	36 (DN 900)
01	1 (DN 25)	**04**	4 (DN 100)	**13**	14 RB	**25**	26 RB	**37**	38 RB
R1	1 RB	**R4**	4 RB	**14**	14 (DN 350)	**26**	26 (DN 650)	**38**	38 (DN 950)
F4	1 ¼ (DN 32)	**05**	5 (DN 125)	**15**	16 RB	**27**	28 RB	**39**	40 RB
1R	1 ¼ RB	**R5**	5 RB	**16**	16 (DN 400)	**28**	28 (DN 700)	**40**	40 (DN 1000)
F5	1 ½ (DN 40)	**06**	6 (DN 150)	**17**	18 RB	**29**	30 RB	**41**	42 RB
2R	1 ½ RB	**R6**	6 RB	**18**	18 (DN 450)	**30**	30 (DN 750)	**...**	More as such

B Valve Type

BA	Ball Valve

C Pressure Rating

0	Special	**7**	Class 2500
1	Class 150	**9**	Class 900
3	Class 300	**8**	Class 800
5	Class 1500	**2**	Class 125
6	Class 600	**4**	Class 400

D End Connection

X	Special	**B**	Butt-Weld (BW)
R	RF Flanged	**S**	Socket-Weld (SW)
J	RTJ Flanged	**W**	Wafer
F	FF Flanged	**L**	Lug
T	Threaded		

E Construction

0	Special
3	2PC Body Trunnion
4	3PC Body Trunnion
6	Welded Body Trunnion

F Body Material

X0	Special	**M9**	A182 F22 CL 3	**L5**	A350 LF3	**S6**	A351 CF8M
C1	A105	**M0**	A217 WC9	**L6**	A352 LC3	**S7**	A182 F316L
C2	A216 WCA	**E1**	A182 F5	**L7**	A350 LF5	**S8**	A351 CF3M
C4	A216 WCB	**E2**	A217 C5	**L8**	A352 LCB	**S9**	A182 F347
C6	A216 WCC	**E4**	A217 C6	**L9**	A350 LF6	**S0**	A351 C F8C
M1	A182 F1	**E5**	A182 F9	**LA**	A350 LF9	**D1**	A182 F51
M2	A217 WC1	**E6**	A217 C12	**LB**	A352 LC9	**D2**	A995 4A
M3	A182 F2	**E7**	A182 F91	**LD**	A352 LCC	**D3**	A182 F53
M4	A217 WC4	**E8**	A217 C12A	**S1**	A182 F304	**D4**	A995 5A
M5	A182 F12 CL 2	**L1**	A350 LF1	**S2**	A351 CF8	**D5**	A182 F55
M6	A217 WC5	**L2**	A352 LCA	**S3**	A182 F304L	**D6**	A995 6A
M7	A182 F11 CL 2	**L3**	A350 LF2	**S4**	A351 CF3		
M8	A217 WC6	**L4**	A352 LC2	**S5**	A182 F316		

G Trim Material

00	Special	**25**	F53/F53/F53	**41**	A105+Ni60/A105+Ni55/4140+ENP
01	F6a/F6a/410	**26**	A105+ENP/A105+ENP/F316	**42**	A105+Ni60/A105+Ni60/17-4PH
02	304/304/304	**27**	304+ENP/304+ENP/304+ENP	**44**	Inconel 625/Inconel 625/Inconel 625
09	Monel/Monel/Monel	**28**	Inconel 625/Inconel 625/F316	**45**	316+ENP/316+ENP/F316
10	316/316/316	**29**	A105+ENP/A105+ENP/4140+ENP	**46**	316+ENP/316+ENP/F316+ENP
13	Alloy 20/Alloy 20/Alloy 20	**30**	A105+ENP/A105+ENP/A105+ENP	**47**	316+Ni60/316+Ni55/17-4PH
19	A105+ENP/A105+ENP/F6a	**31**	316/316/17-4PH	**48**	316L+Ni60/316L+Ni55/17-4PH
20	304L/304L/304L	**36**	LF2+ENP/LF2+ENP/F6a	**49**	316+Ni60/316+Ni55/4140+ENP
21	316L/316L/316L	**37**	A105+TCC/A105+TCC/17-4PH	**50**	316L+Ni60/316L+Ni55/4140+ENP
22	F321/F321/F321	**38**	A105+TCC/A105+TCC/4140+ENP		
23	F55/F55/F55	**39**	A105+TCC/A105+TCC/F51		
24	F51/F51/F51	**40**	A105+ENP/A105+ENP/17-4PH		

VALVE FIGURE NUMBER (CONT'D)

HOW TO ORDER

	Nominal Size		Valve Type		Pressure Rating	End Conn.	Construct-ion	Body Material		Trim Material		Seat or Insert	O-ring	Operation Mode
	A		B		C	D	E	F		G		H	I	J
e.g.	1	6	B	A	6	R	4	C	1	1	0	N	1	G

is a NPS 16 Class 600 trunnion ball valve, RF flanged, 3-piece split body, A105 body, SS316 trim, Nylon seat insert, Viton O-ring, gear operated.

H Seat or Seat Insert

X	Special	**M**	Metal
T	PTFE	**O**	Molon
R	RPTFE	**E**	EPDM
N	Nylon	**L**	PPL
V	Viton	**A**	Delrin
Q	TFM		
D	Devlon		
P	PEEK		
C	PCTFE		
H	HNBR		

I O-Ring

0	None
1	Viton
2	Teflon
3	HNBR
4	NBR
5	Special
6	EPDM
7	FVMQ
8	FFKM
9	AFLAS

J Operation

B	Bare Stem
L	Lever
G	Gearbox
P	Pneumatic
E	Electric
C	Gear w/ Chain
N	Pneumatic-Hydraulic
S	Solid Lever
D	Lever with locking device
R	Solid lever with locking device

HOW THE FIGURE NUMBER SYSTEM WORKS

Introduction. Figure number system uses a code consisting 14 digits of letters and numbers to represent the specification of a valve of certain specification. Of 14 digits, they are separated into 10 groups identified by letters from A to J. Each group represents a parameter of a valve, together they contain almost all the essential parameters of the valve.

Uses. To use the figure number system to generate a code is easy. Under each group, the code is shown on the left while on the right is the meaning of the code. Start by selecting a code from group A, through group J. If the specification of the valve is not listed, select the code for "Special ". The total length of the figure number shall be exactly 14 digits.

Cautions. It is advised that you have as detailed the specification as possible to generate a figure number, which means eliminating "Specials". If you don't have enough specification or information about the valve you are ordering, or you're not sure how to use the system to generate a figure number, contact one of our sales representatives for help.

Note: ERREESSE reserves the right to make any modifications without notice.

Offshore

Pipeline

ERREESSE

Onshore

Refinery

IMPORTANT NOTICE

- All dimensions in inches not listed in standards are converted from millimeters. Weights in lbs (pounds) are converted from kilograms.
- Data listed in the catalog, including dimensions, weights, specifications and other valve related data are intended to provide general information and guidance only.
- FBV Inc. assumes no responsibility for errors or inadequacy relevant to any information provided in this catalog. Any information provided in this catalog is subject to change without notice.

ERREESSE Valve GmbH

Berlin Kreuz Berg District ÿ Germany T +49 303 1879831 www.erreesse.de

F +49 303 1879834 E info@erreesse.de