ERREESSE Valve GmbH

FORGED STEEL VALVE

FS-1601A (EN)

ERREESSE VALVE

ABOUT US

ERREESSE is an ISO 9001 certified company specializing in manufacturing industrial valves including ball valves, gate valves, globe valves, check valves, plug valves and butterfly valves in carbon steel, stainless steel, duplex stainless and alloy materials. Our products conform to the latest industry standards in accordance to ANSI, ASME and API.

ERREESSE has over 600,000 square feet of manufacturing facilities. Through its conviction to provide the finest quality products and services to match the need of our customers, ERREESSE has now established itself as a serious player in the valve business.

ERREESSE sold worldwide in North America, Europe, South America, South Asia, Africa and the Middle East. We consider product quality and customer satisfaction our highest priority. We look forward to new customer relationships by providing value, quality, customer service, honesty, integrity and the commitment to maintain product consistency with each and every order.

MISSION STATEMENT

We at ERREESSE commit to taking ACTION :

- Adopt the latest technology to take the product quality to the next level;
- Consistently provide on-time services to our customers;
- Train and develop talented people with strong work ethics to deliver effective performance;
- Improve and enhance engineering designs to ensure product performance;
- Optimize management systems and increase productivity;
- Never forget our customer and employee needs.

ERREESSE

TABLE OF INDEX | *PAGE*

Introduction, *Features*	*3*
Scope of Products & Flow Coefficient(CV)	*4*
Overview Gate Valve	*5*
Dimensions and Weights	
Class 800 ~CL2500 (SW/NPT)	*6*
Class 150 ~CL1500 (RF/RTJ)	*7*
Class 900 ~CL2500 (Pressure Seal Bonnet)	*8*
Overview, T-Type Globe Valve	*9*
Dimensions and Weights	
Class 800 ~CL2500 (SW/NPT)	*10*
Class 150 ~CL1500 (RF/RTJ)	*11*
Class 900 ~CL2500 (Pressure Seal Bonnet)	*11*
Overview, Y-Type Globe Valve	*13*
Dimensions and Weights	
Class 800 ~CL2500 (SW/NPT)	*14-15*
Overview, Check Valve	*16*
Dimensions and Weights	
Class 800 ~CL2500 (Swing Type ,SW/NPT)	*17*
Class 800 ~CL2500 (Lift Type ,SW/NPT)	*18*
Class 150 ~CL1500 (RF/RTJ)	*19*
Class 900 ~CL2500 (Pressure Seal Bonnet)	*20*
Specical Type	*21*
Valve Figure Number, *How To Order*	*22-23*

This page is intentionally left blank.

INTRODUCTION

ERREESS forged steel valve has the advantages of small volume and compact type. Bolted bonnet, welded bonnet, pressure bonnet, bellow seal bonnet, high/low temperature extended bonnet and ISO 15848 fugitive emission designed valves are available upon different request of services.

ERREESSE forged steel gate vales adopts solid gate, renewl seat, rising stem and non-ring hand wheel. It plays the role of pipe opening and closing ultimately through the rotation of the hand wheel to drive the lifting of gate.

Forged Steel Globe Valve

ERREESSE forged globe valve offers non-renewable seat by default with rising stem and hand wheel. It blocks the flow of pipeline through the rotation and lifting of hand wheel as well as stem to drive the lift of disc. There is no relative friction between disc and body sealing surface. The globe valves has the feature of long service life for opening and closing, it can be used a shut-off valve for small size pipeline.

Forged Steel Check Valve

ERREESSE forged check valve is to provide with single disc. With the force of medium, the disc will automatically open or close around the fixed pin shaft. When the media stops the flow, the disc will be closed under its own force. No manual intervention is involved in the whole process；

Check valve is mainly to prevent the media reverse flow and ensure one-way flow of media channels only. It prevents accidents while a sudden loss of power in the pipeline medium such as the power equipment like pump damages, and the medium reserve flow against power source.

SCOPE OF PRODUCTS

Forged Steel Valve(Gate,Globe,Check)

Legends:
A –Available in Bolt Bonnet
B– Available in Welding Bonnet
C– Available in Pressure Seal Bonnet
D–Not Usually Required

Size in/mm	Class 150 PN 20	Class 300 PN 50	Class 600 PN 100	Class 800 PN 136	Class 900 PN 150	Class 1500 PN 250	Class 2500 PN 420
3/8 10	AB	AB	AB	ABC	ABC	ABC	BC
1/2 15	AB	AB	AB	ABC	ABC	ABC	BC
3/4 20	AB	AB	AB	ABC	ABC	ABC	BC
1 25	AB	AB	AB	ABC	ABC	ABC	BC
1-1/4 32	AB	AB	AB	ABC	ABC	ABC	BC
1-1/2 40	AB	AB	AB	ABC	ABC	ABC	BC
2 50	AB	AB	AB	ABC	ABC	ABC	BC
2-1/2 65	AB	AB	AB	A	C	D	D
3 65	D	D	D	D	D	D	D

1.The sizes listed above are normal diameters. Contact our sales representative if any other dimensions are requested;

FLOW COEFFICIENT (Cv)

Nominal Size *in/mm*	Gate Valve		Globe Valve / Piston Check valve			Swing Check Valve	
			T-Type		Y-Type		
	Regular Port	Full Port	Regular Port	Full Port	Full Port	Regular Port	Full Port
3/8 10	-	3.9	-	2.2	3	-	4.8
1/2 15	3.7	6.7	2	3.8	5.4	4.6	7.7
3/4 20	6.4	11.7	3.6	6	11.4	7.4	14.5
1 25	11.4	22.5	5.7	9.4	18	14.1	25.5
1-1/4 32	22	35.4	8.8	14.7	29.2	25.1	37
1-1/2 40	35	54.5	14.3	21.5	45.6	36.7	60.2
2 50	53.9	-	21.1	-	72	59.7	-

The above data remains the same based on different pressure rating ;

CALCULATION OF FLOW COEFFICIENT

Flow coefficient Cvis the rate of flow in gallon per minute with the pressure drop of 1 psi across the valve. The flow coefficients shown in the above table are determined with equations as follows:

For liquids:

$$Q_l = C_v(\Delta P/SG)^{1/2}$$

Where:
Q_l = Flow of liquid (gallon/minute)
ΔP = Pressure drop in psi (P_1-P_2)
SG = Specific gravity (1 for liquid)

For gases (non-critical):

$$Q_g = 61 \cdot C_v(P_2 \cdot P_1 \ / \ SG)^{1/2}$$

Where:
Q_g = Flow of gases (SFH at STP)
P_2 = Outlet pressure (psi)
P_1 = Inlet pressure (psi)
SG = Specific gravity (1 for gas)

OVERVIEW (GATE VALVE)

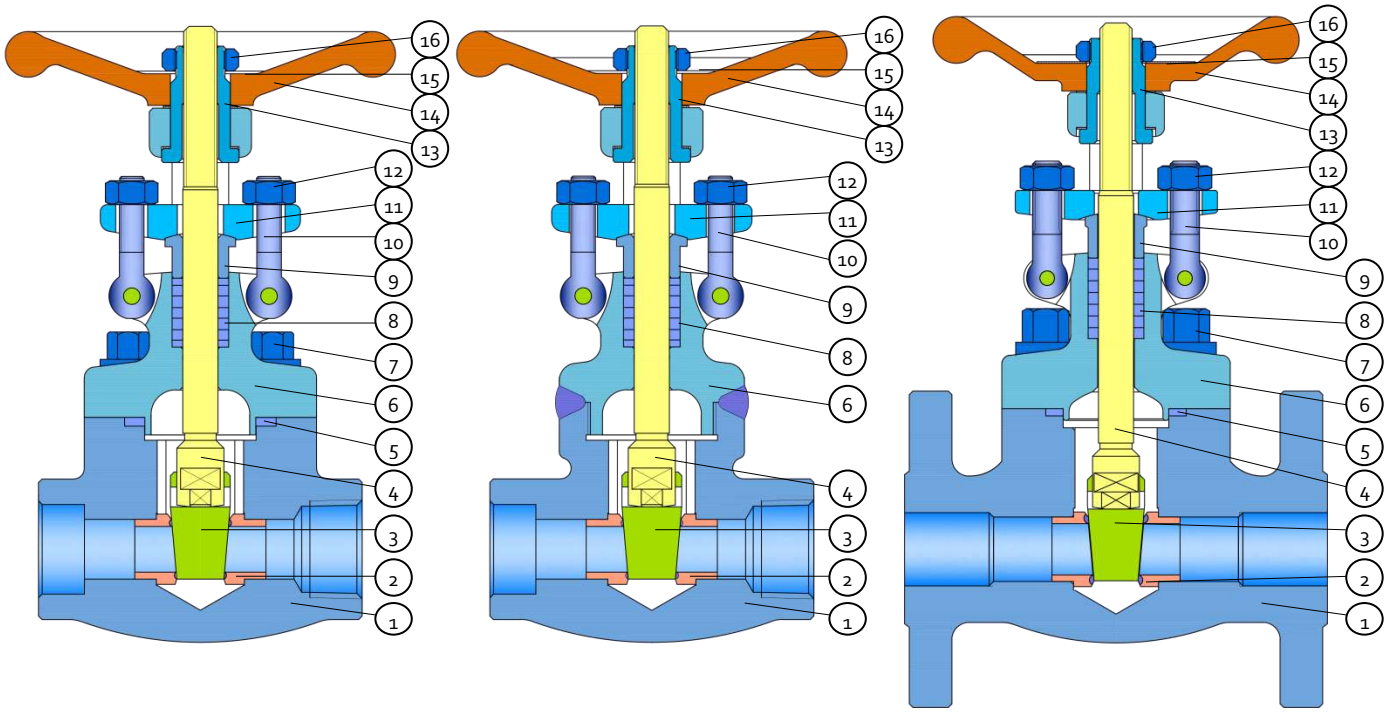

Part List

1 Body	5 Gasket	9 Gland	13 Stem Nut
2 Seat Ring	6 Bonnet	10 Eyes Bolt	14 Handwheel
3 Disc	7 Bolt	11 Gland Flange	15 Nameplate
4 Stem	8 Packing	12 Nut	16 Nut

Standards

Design & Manufacture	API 602, ISO 15761, ASME B16.34	
Face-to-face	ERREESSE'STD, ASME B16.10	
End Dimension	ASME B1.20.1 (NPT) ASME B16.11 (SW) ASME B16.25 (BW) ASME B16.5 (RF, RTJ),	
Test & Inspection	API 598	
TypicalMaterials	Body, Bonnet,Disc	A105,A350 LF2, LF3, LF5, A182 F304, F304L, F316, F316L, F51, F53, F5,F11,F22,F91, Monel, Inconel, Hastelloy
	Stem	A276 410, F304, F304L, F316, F316L, F51, F53, Monel, Inconel, Hastelloy

DIMENSIONS AND WEIGHTS (Gate Valve)

-

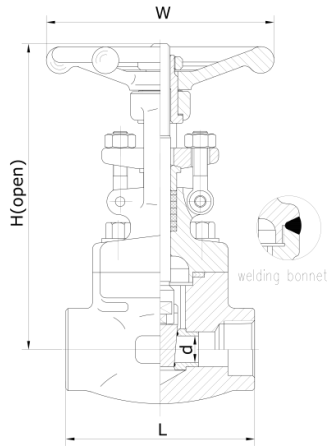

CL800	Bolt Bonnet(**BB**)/ Welding Bonnet(**WB**), Reduce Port(**RP**)/Full Port(**FP**), OutSide Screw and Yoke(**OS&Y**), Thread(**NPT**), Socket Weld(**SW**), Butt Weld(**BW**),							
Size (NPS)	**R.P**	1/2	3/4	1	1-1/4	1-1/2	2	2-1/2
	F.P	3/8	1/2	3/4	1	1-1/4	1-1/2	2
Face To Face	L	79	92	111	120	120	140	178
Handwheel Diameter	W	100	100	125	160	160	180	200
Height	H	165	169	207	230	249	283	333
Flow Port Diameter	d	10.3	13.5	18	23	29	36	45
Weight (Kg)	**B.B**	2.2	2.4	4.1	5.5	7.5	10	19
	W.B	2.1	2.3	4	5.5	7.3	9.5	18.5

-

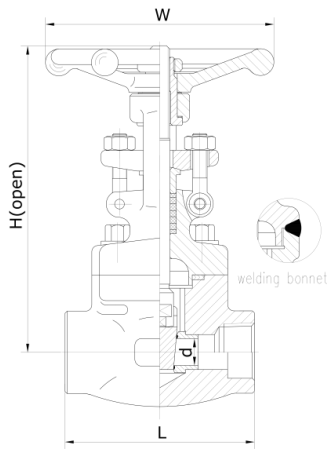

CL900~CL1500	Bolt Bonnet(**BB**)/ Welding Bonnet(**WB**), Reduce Port(**RP**)/Full Port(**FP**), OutSide Screw and Yoke(OS&Y), Thread(NPT), Socket Weld(SW), Butt Weld(BW),							
Size (NPS)	**R.P**	1/2	3/4	1	1-1/4	1-1/2	2	2-1/2
	F.P	3/8	1/2	3/4	1	1-1/4	1-1/2	2
Face To Face	L	92	111	120	120	140	178	
Handwheel Diameter	W	100	125	160	160	180	200	
Height	H	169	207	230	249	283	333	
Flow Port Diameter	d	10.3	13.5	18	23	29	36	
Weight (Kg)	**B.B**	2.4	4.1	6.2	6.2	8.7	12.5	
	W.B	2.2	4	6	6	8.5	12	

-

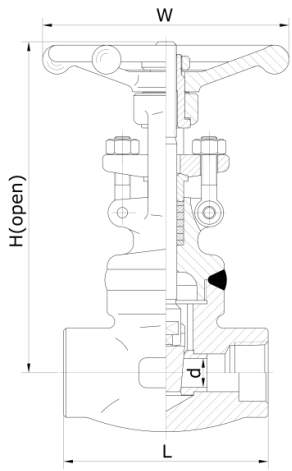

CL2500	Welding Bonnet(**WB**), Reduce Port(**RP**)/Full Port(**FP**), OutSide Screw and Yoke(**OS&Y**), Thread(**NPT**), Socket Weld(**SW**), Butt Weld(**BW**),							
Size (NPS)	**R.P**	3/8	1/2	3/4	1	1-1/4	1-1/2	2
Face To Face	L		120	120	120	140	178	178
Handwheel Diameter	W		160	160	160	180	200	200
Height	H		230	235	249	283	333	333
Flow Port Diameter	d		10.3	13.5	18	23	29	36
Weight (Kg)	**W.B**		6.5	6.5	6.5	9	13	13

The dimension and weights are for reference only and subject to change without notice.
1.For more size or dimensional information, please contact our sales representative.
2. CL800covers CL150,CL300,CL600, CL1500covers CL900,CL1500.

DIMENSIONS AND WEIGHTS (Gate Valve)

-

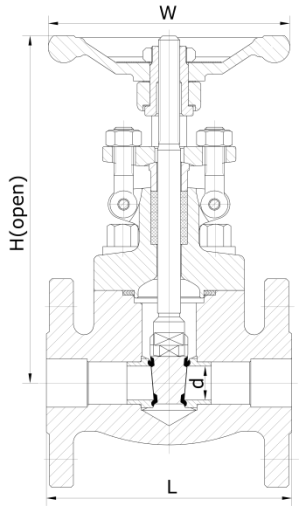

CL150~CL600		Bolt Bonnet(**BB**). Reduce Port(**RP**), OutSide Screw and Yoke(**OS&Y**), Flanged(**RF/RTJ**),							
Size (NPS)		**R.P**	1/2	3/4	1	1-1/4	1-1/2	2	2-1/2
Face To Face	CL150	L (RF)	108	117	127	140	165	178	
	CL300		140	152	165	178	190	216	
	CL600		165	190	216	229	241	292	
Handwheel Diameter		W	100	100	125	160	160	180	
Height		H	165	169	207	230	249	283	
Flow Port Diameter		d	10.3	13.5	18	23	29	36	
Weight (Kg)	CL150	**B.B**	4.1	4.8	7.1	10	11.6	20	
	CL300		4.8	6.7	10	13.6	17.2	24	
	CL600		5.4	7.4	10.6	15	19.2	28.8	

-

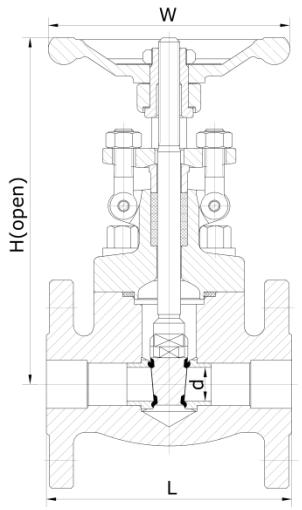

CL900~CL1500		Bolt Bonnet(**BB**). Reduce Port(**RP**), OutSide Screw and Yoke(**OS&Y**), Flanged(**RF/RTJ**),							
Size (NPS)		**R.P**	1/2	3/4	1	1-1/4	1-1/2	2	2-1/2
Face To Face	CL90	L (RF)	216	229	254	279	305	368	
	CL1500								
Handwheel Diameter		W	125	125	160	160	180	180	
Height		H	169	207	230	249	283	333	
Flow Port Diameter		d	10.3	13.5	18	23	29	36	
Weight (Kg)	CL900	**B.B**	10.1	13	18.3	26	32.8	54	
	CL1500								

The dimension and weights are for reference only and subject to change without notice.

1. The flanged valve are defaulted by integral flange；
2. For more size or dimensional information, please contact our sales representative.

DIMENSIONS AND WEIGHTS (Gate Valve - Pressure Seal Bonnet)

-

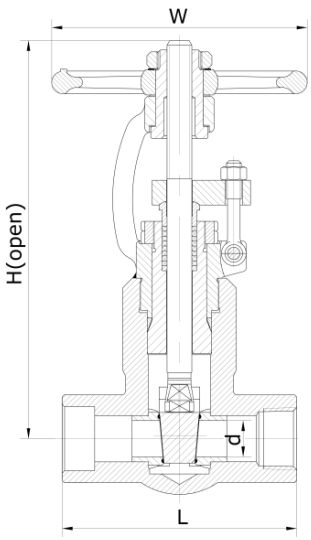

CL900~CL2500		Pressure Seal Bonnet(**PSB**), Full Port(**FP**), OutSide Screw and Yoke(**OS&Y**), Thread(**NPT**), Socket Weld(**SW**), Butt Weld(**BW**),							
Size (NPS)		**F.P**	3/8	1/2	3/4	1	1-1/4	1-1/2	2
Face To Face	CL900 CL1500	L	140	140	140	140	178	178	216
	CL2500		182	182	182	182	232	232	272
Handwheel Diameter	CL900 CL1500 CL2500	W	200	200	200	200	280	280	300
Height	CL900 CL1500	H	308	308	315	315	446	446	540
	CL2500		325	325	325	325	460	460	550
Flow Port Diameter		d	8	10.3	13.5	18	23	29	36
Weight (Kg)	CL900 CL1500	**PSB**	9	9	9	9	26	26	36
	CL2500		11.9	11.9	11.8	11.7	30	28	42

-

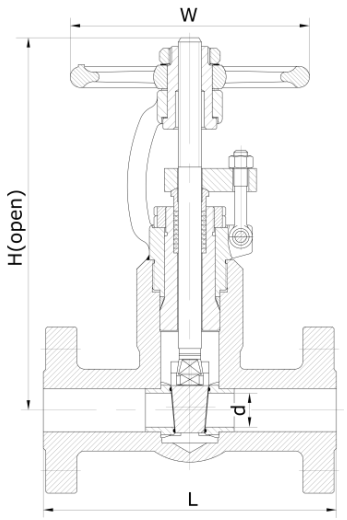

CL900~CL2500		Pressure Seal Bonnet(**PSB**), Full Port(**FP**), OutSide Screw and Yoke(**OS&Y**), Flanged(**RF/RTJ**),							
Size (NPS)		**F.P**	3/8	1/2	3/4	1	1-1/4	1-1/2	2
Face To Face	CL900 CL1500	L (RF)		216	229	254	279	305	368
	CL2500			264	273	308	349	384	451
Handwheel Diameter	CL900 CL1500 CL2500	W		200	200	200	280	280	300
Height	CL900 CL1500	H		308	315	315	446	446	540
	CL2500			325	325	325	460	460	550
Flow Port Diameter		d		10.3	13.5	18	23	29	36
Weight (Kg)	CL900 CL1500	**PSB**		11.9	13.7	18	36.8	37	45
	CL2500			13	17	22	30	42	58

The dimension and weights are for reference only and subject to change without notice.

1. The flanged valve are defaulted by integral flange;
2. For more size or dimensional information, please contact our sales representative.

OVERVIEW (GLOBE VALVE)

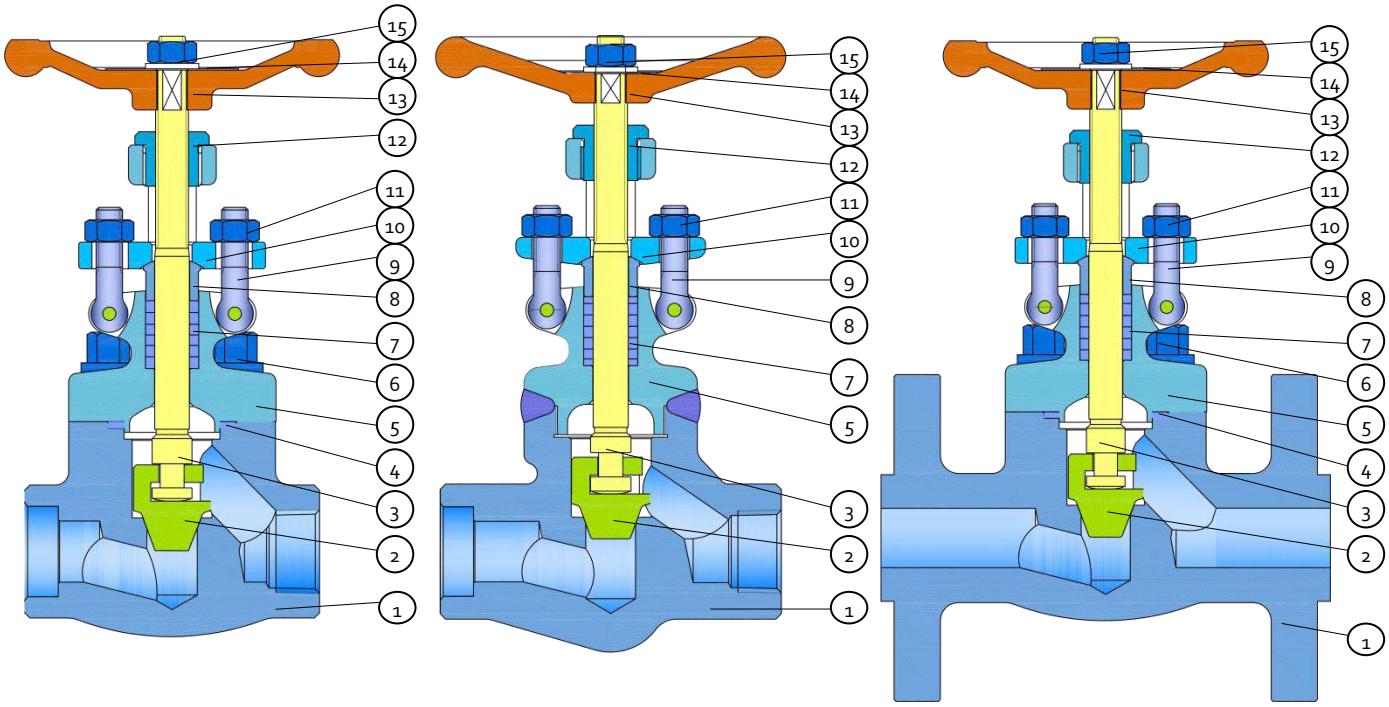

Part List

1	Body	5	Bonnet	9	Eyes Bolt	13	Handwheel
2	Disc	6	Bolt	10	Gland Flange	14	Nameplate
3	Stem	7	Packing	11	Nut	15	Nut
4	Gasket	8	Gland	12	Stem Nut		

Standards

Design & Manufacture	API 602, ISO 15761, ASME B16.34
Face-to-face	ERREESSE'STD, ASME B16.10
End Dimension	ASME B1.20.1 (NPT) ASME B16.11 (SW) ASME B16.25 (BW) ASME B16.5 (RF, RTJ),
Test & Inspection	API 598
Typical Materials	Body, Bonnet, Disc: A105,A350 LF2, LF3, LF5, A182 F304, F304L, F316, F316L, F51, F53, F5,F11,F22,F91, Monel, Inconel, Hastelloy
	Stem: A276 410, F304, F304L, F316, F316L, F51, F53, Monel, Inconel, Hastelloy

DIMENSIONS AND WEIGHTS (Globe Valve)

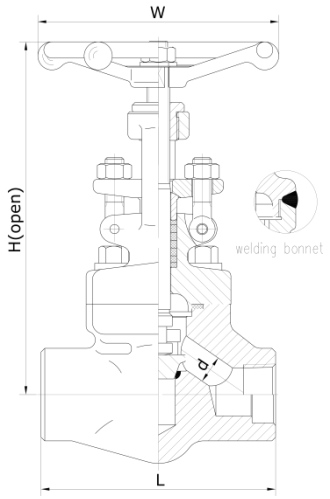

CL800	Bolt Bonnet(**BB**)/ Welding Bonnet(**WB**), Reduce Port(**RP**)/Full Port(**FP**), OutSide Screw and Yoke(**OS&Y**), Thread(**NPT**), Socket Weld(**SW**), Butt Weld(**BW**),							
Size (NPS)	**R.P**	1/2	3/4	1	1-1/4	1-1/2	2	2-1/2
	F.P	3/8	1/2	3/4	1	1-1/4	1-1/2	2
Face To Face	L	79	92	111	120	152	172	220
Handwheel Diameter	W	100	100	125	160	160	180	200
Height	H	170	172	207	228	270	320	356
Flow Port Diameter	d	10.5	13.5	17	22	28	34	44
Weight (Kg)	**B.B**	2.2	2.4	4.1	5.7	7.6	12.2	21
	W.B	1.9	2.1	3.9	5.5	7.4	11.6	19.7

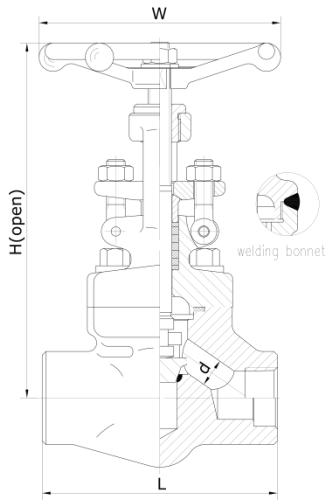

CL900~CL1500	Bolt Bonnet(**BB**)/ Welding Bonnet(**WB**), Reduce Port(**RP**)/Full Port(**FP**), OutSide Screw and Yoke(**OS&Y**), Thread(**NPT**), Socket Weld(**SW**), Butt Weld(**BW**),							
Size (NPS)	**R.P**	1/2	3/4	1	1-1/4	1-1/2	2	2-1/2
	F.P	3/8	1/2	3/4	1	1-1/4	1-1/2	2
Face To Face	L	92	111	120	152	172	220	
Handwheel Diameter	W	100	125	160	160	180	200	
Height	H	172	207	228	270	320	387	
Flow Port Diameter	d	10.5	13.5	17	22	28	34	
Weight (Kg)	**B.B**	4.1	5.6	6.7	7.6	12.2	21	
	W.B	3.8	5.4	6.5	7.4	12	20.2	

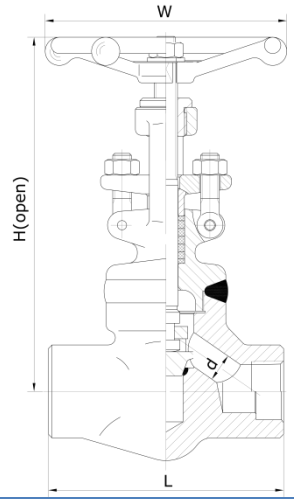

CL2500	Welding Bonnet(**WB**), Reduce Port(**RP**)/Full Port(**FP**), OutSide Screw and Yoke(**OS&Y**), Thread(**NPT**), Socket Weld(**SW**), Butt Weld(**BW**),							
Size (NPS)	**R.P**	3/8	1/2	3/4	1	1-1/4	1-1/2	2
Face To Face	L		120	120	152	172	220	220
Handwheel Diameter	W		160	160	160	180	200	200
Height	H		228	228	270	320	387	396
Flow Port Diameter	d		10.5	13.5	17	22	28	34
Weight (Kg)	**W.B**		6.7	6.5	7.6	12.2	21	20.7

The dimension and weights are for reference only and subject to change without notice.

1. For more size or dimensional information, please contact our sales representative.

DIMENSIONS AND WEIGHTS (Globe Valve)

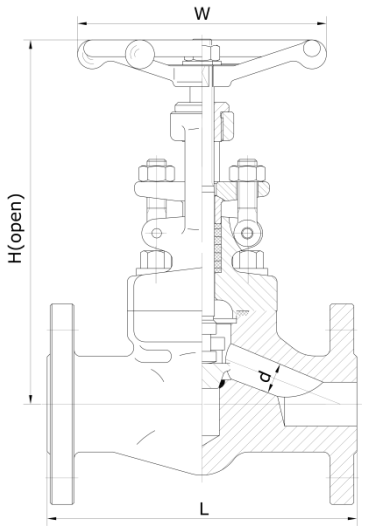

CL150~CL600		Bolt Bonnet(**BB**). Reduce Port(**RP**), OutSide Screw and Yoke(**OS&Y**), Flanged(**RF/RTJ**),							
Size (NPS)		**R.P**	1/2	3/4	1	1-1/4	1-1/2	2	2-1/2
Face To Face	CL150	L (RF)	108	117	127	140	165	203	
	CL300		152	178	203	216	229	267	
	CL600		165	190	216	229	241	292	
Handwheel Diameter		W	100	100	125	160	160	180	
Height		H	170	172	207	228	270	320	
Flow Port Diameter		d	10.5	13.5	17	22	28	34	
Weight (Kg)	CL150	**B.B**	4.1	4.8	7.1	10	12.7	21	
	CL300		4.8	6.7	10	14.5	18.3	25.2	
	CL600		5.4	7.4	11	16	19.2	28.8	

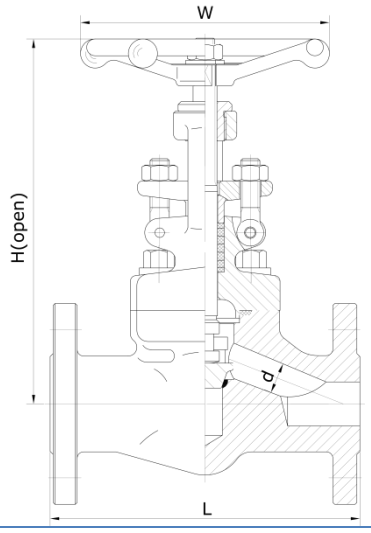

CL900~CL1500		Bolt Bonnet(**BB**). Reduce Port(**RP**), OutSide Screw and Yoke(**OS&Y**), Flanged(**RF/RTJ**),							
Size (NPS)		**R.P**	1/2	3/4	1	1-1/4	1-1/2	2	2-1/2
Face To Face	CL900	L (RF)	216	229	254	279	305	368	
	CL1500								
Handwheel Diameter		W	100	100	125	160	160	180	
Height		H	170	172	207	228	270	320	
Flow Port Diameter		d	10.5	13.5	17	22	28	34	
Weight (Kg)	CL900	**B.B**	10.1	13	18.3	26	32.8	54	
	CL1500								

The dimension and weights are for reference only and subject to change without notice.

1. The flanged valve are defaulted by integral flange；
2. For more size or dimensional information, please contact our sales representative.

.

DIMENSIONS AND WEIGHTS (Globe Valve-Pressure Seal Bonnet)

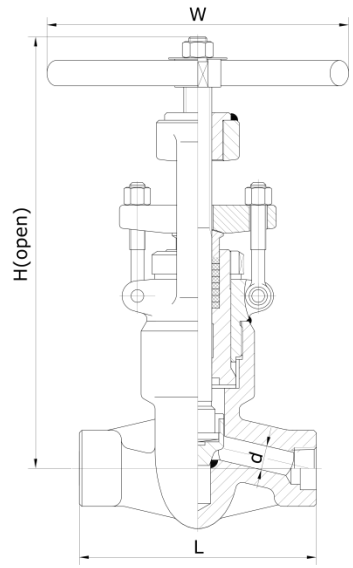

CL900~CL2500		Pressure Seal Bonnet(**PSB**), Full Port(**FP**), OutSide Screw and Yoke(**OS&Y**), Thread(**NPT**), Socket Weld(**SW**), Butt Weld(**BW**),							
Size (NPS)		**F.P**	3/8	1/2	3/4	1	1-1/4	1-1/2	2
Face To Face	CL900 CL1500	L	140	140	140	140	178	178	216
	CL2500		182	182	182	182	232	232	272
Hand wheel Diameter	CL900 CL1500 CL2500	W	160	160	160	160	180	180	200
Height	CL900 CL1500	H	325	325	325	325	430	430	495
	CL2500		330	330	330	330	480	480	530
Flow Port Diameter		d	8	13.5	17	22	28	34	42
Weight (Kg)	CL900 CL1500	**PSB**	9	9	8.9	8.8	26	25.6	45
	CL2500		12.3	12.3	11.6	11	26	28.4	60

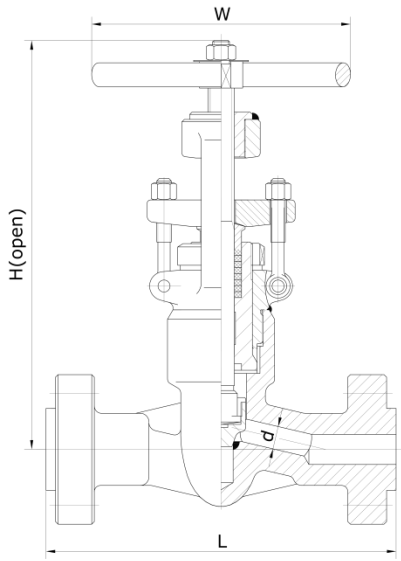

CL900~CL2500		Pressure Seal Bonnet(**PSB**), Full Port(**FP**), OutSide Screw and Yoke(**OS&Y**), Flanged(**RF/RTJ**),							
Size (NPS)		**F.P**	3/8	1/2	3/4	1	1-1/4	1-1/2	2
Face To Face	CL900 CL1500	L (RF)		216	229	254	279	305	368
	CL2500			264	273	308	349	384	451
Hand wheel Diameter	CL900 CL1500 CL2500	W		160	160	160	180	180	200
Height	CL900 CL1500	H		325	325	325	430	430	495
	CL2500			330	330	330	480	480	530
Flow Port Diameter		d		13.5	17	22	28	34	42
Weight (Kg)	CL900 CL1500	**PSB**		11.9	13.7	18	36.8	37	45
	CL2500			13	17	22	30	42	58

The dimension and weights are for reference only and subject to change without notice.

3. The flanged valve are defaulted by integral flange;
4. For more size or dimensional information, please contact our sales representative.

DIMENSIONS AND WEIGHTS (Globe Valve-Y-Type)

-

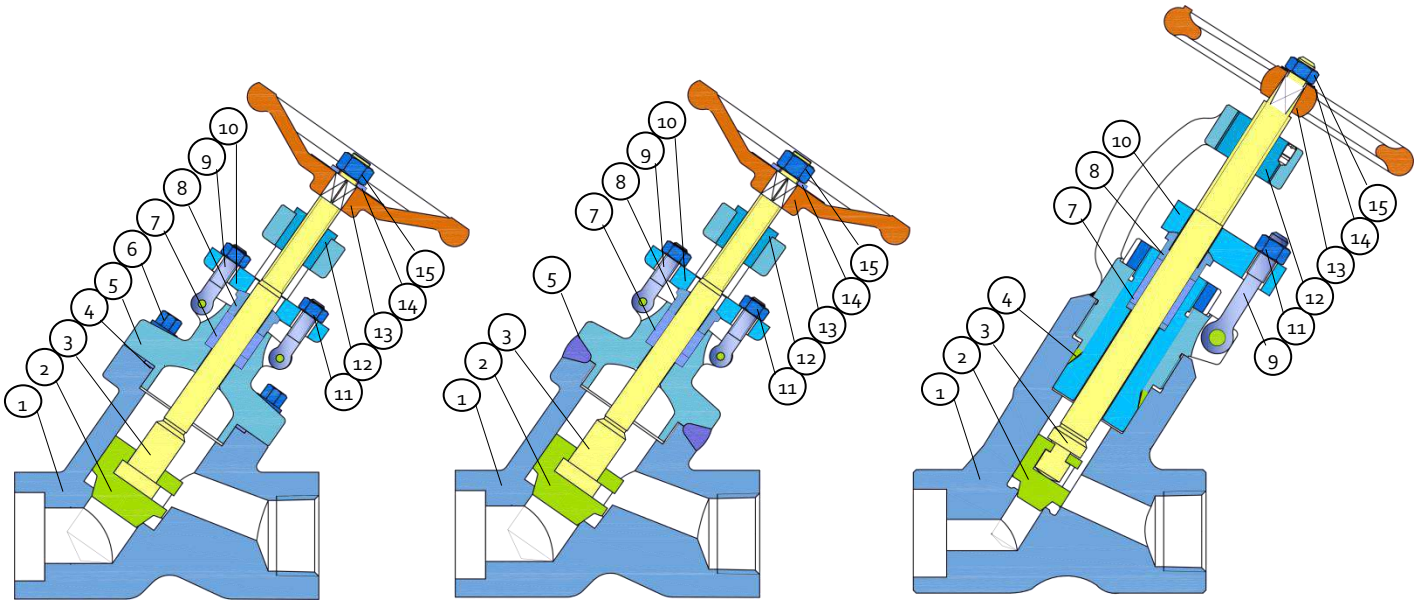

Part List

1 Body	5 Bonnet	9 Eyes Bolt	13 Handwheel
2 Disc	6 Bolt	10 Gland Flange	14 Nameplate
3 Stem	7 Packing	11 Nut	15 Nut
4 Gasket	8 Gland	12 Stem Nut	

Standards

Design & Manufacture ASME B16.34

Face-to-face ERREESSE'STD

End Dimension
ASME B1.20.1 (NPT)
ASME B16.11 (SW)
ASME B16.25 (BW)
ASME B16.5 (RF, RTJ),

Test & Inspection API 598

Typical Materials

Body, Bonnet,Disc A105,A350 LF2, LF3, LF5, A182 F304, F304L, F316, F316L, F51, F53, F5,F11,F22,F91, Monel, Inconel, Hastelloy

Stem A276 410, F304, F304L, F316, F316L, F51, F53, Monel, Inconel, Hastelloy

DIMENSIONS AND WEIGHTS (Globe Valve - Y-Type)

-

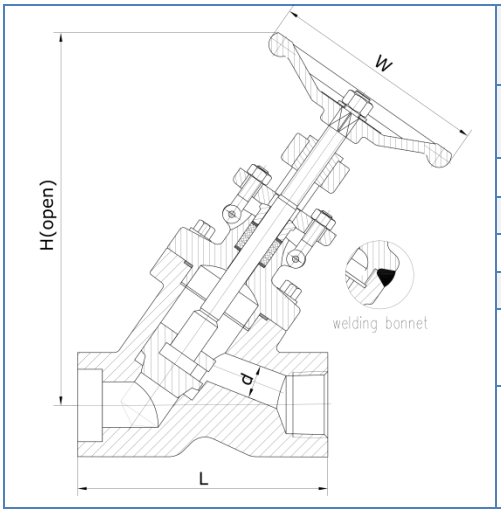

CL800	Bolt Bonnet(**BB**)/ Welding Bonnet(**WB**), Full Port(**FP**), OutSide Screw and Yoke(**OS&Y**), Thread(**NPT**), Socket Weld(**SW**), Butt Weld(**BW**),							
Size (NPS)	**F.P**	3/8	1/2	3/4	1	1-1/4	1-1/2	2
Face To Face	L	100	100	100	120	140	140	172
Handwheel Diameter	W	100	125	160	160	160	180	200
Height	H	180	180	188	280	280	295	350
Flow Port Diameter	d	10	13.5	17	22	28	34	42
Weight (Kg)	**B.B**	3.8	4.6	4.6	9.3	14	14	19.6
	W.B	3.7	4.5	4.5	9	13.5	13.5	19.1

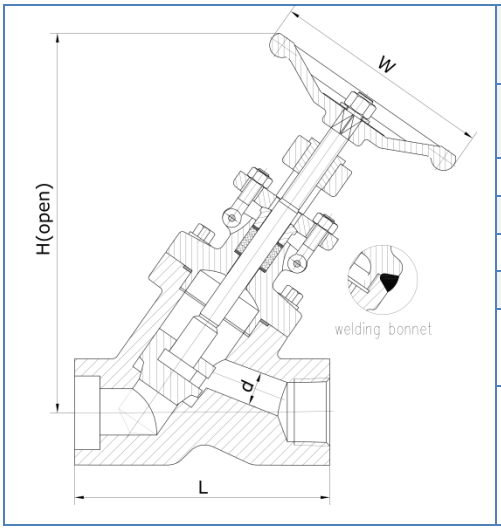

CL900~CL1500	Bolt Bonnet(**BB**)/ Welding Bonnet(**WB**), Full Port(**FP**), OutSide Screw and Yoke(**OS&Y**), Thread(**NPT**), Socket Weld(**SW**), Butt Weld(**BW**),							
Size (NPS)	**F.P**	3/8	1/2	3/4	1	1-1/4	1-1/2	2
Face To Face	L	100	100	120	140	140	172	220
Handwheel Diameter	W	125	160	160	160	180	200	200
Height	H	180	188	280	280	295	350	365
Flow Port Diameter	d	10	13.5	17	22	28	34	42
Weight (Kg)	**B.B**	4.6	4.6	9.3	14	14	19.6	38.6
	W.B	4.5	4.5	9	13.5	13.5	19.1	38

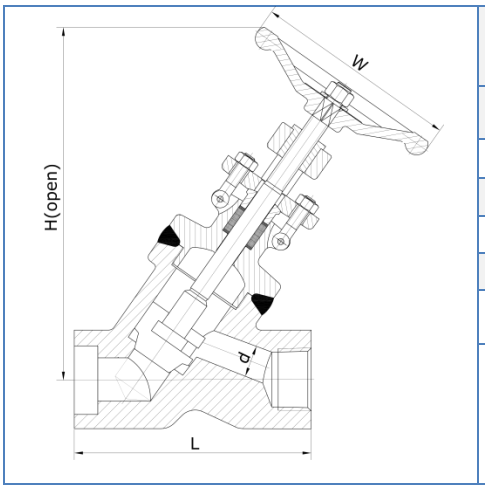

CL2500	Welding Bonnet(**WB**), Full Port(**FP**), OutSide Screw and Yoke(**OS&Y**), Thread(**NPT**), Socket Weld(**SW**), Butt Weld(**BW**),							
Size (NPS)	**F.P**	3/8	1/2	3/4	1	1-1/4	1-1/2	2
Face To Face	L		120	140	140	172	220	232
Handwheel Diameter	W		160	160	180	200	200	250
Height	H		280	280	295	350	365	400
Flow Port Diameter	d		17	22	28	34	42	55
Weight (Kg)	**W.B**		9.3	14	14	19.6	38.6	53.5

The dimension and weights are for reference only and subject to change without notice.

1. For more size or dimensional information, please contact our sales representative.

DIMENSIONS AND WEIGHTS (Globe Valve - Pressure Seal Bonnet)

-

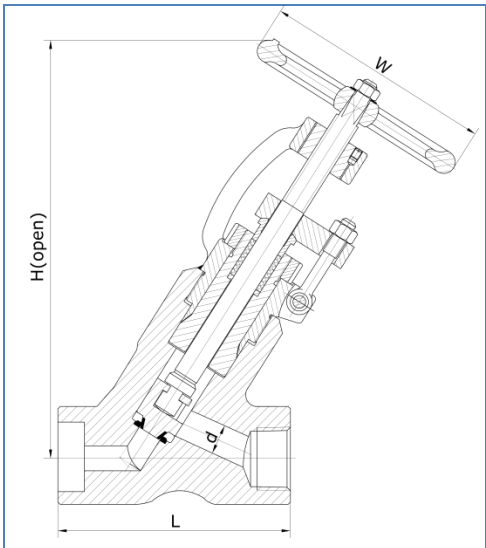

CL900~CL2500		Pressure Seal Bonnet(**PSB**), Full Port(**FP**), OutSide Screw and Yoke(**OS&Y**), Thread(**NPT**), Socket Weld(**SW**), Butt Weld(**BW**),							
Size (NPS)		**F.P**	3/8	1/2	3/4	1	1-1/4	1-1/2	2
Face To Face	CL900 CL1500	L	140	140	140	140	232	232	232
	CL2500		140	140	140	140	232	232	272
Handwheel Diameter	CL900 CL1500	W	160	160	160	180	200	200	250
	CL2500								
Height	CL900 CL1500	H	280	280	280	295	350	365	400
	CL2500		280	280	280	295	350	365	420
Flow Port Diameter		d	13	17	22	28	34	42	55
Weight (Kg)	CL900 CL1500	**PSB**	12.5	12.5	12.5	12.5	28	26.5	36
	CL2500		12.5	12.5	12.5	12.5	28	26.5	42

The dimension and weights are for reference only and subject to change without notice.

1. For more size or dimensional information, please contact our sales representative.

OVERVIEW (CHECK VALVE)

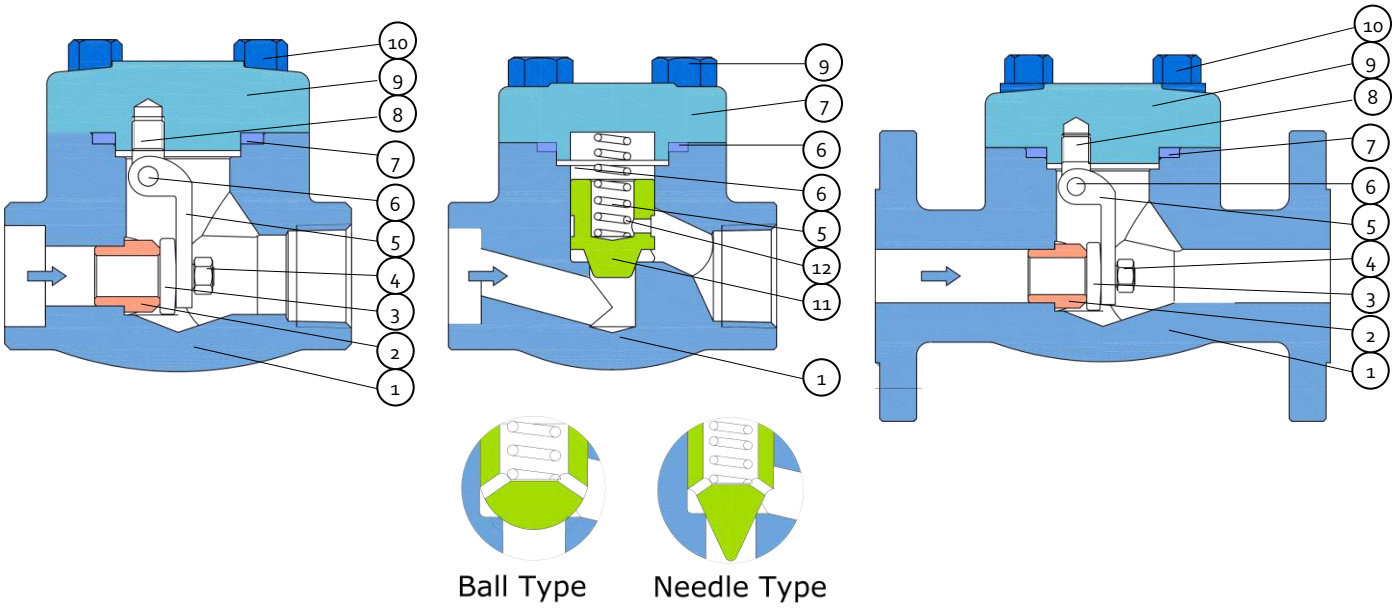

Part List

1	Body	5	Hinge	9	Cover
2	Seat	6	Pin	10	Bolt
3	Disc	7	Gasket	11	Plug
4	Nut	8	Bolt	12	Spring

Standards

Design & Manufacture	API 602, ISO 15761, ASME B16.34	
Face-to-face	ERREESSE'STD, ASME B16.10	
End Dimension	ASME B1.20.1 (NPT) ASME B16.11 (SW) ASME B16.25 (BW) ASME B16.5 (RF, RTJ),	
Test & Inspection	API 598	
Typical Materials	Body, Cover Disc	A105,A350 LF2, LF3, LF5, A182 F304, F304L, F316, F316L, F51, F53, F5,F11,F22,F91, Monel, Inconel, Hastelloy
	Hing	A351 CF8M, Monel, Inconel, Hastelloy

DIMENSIONS AND WEIGHTS (Check Valve - Swing Type)

-

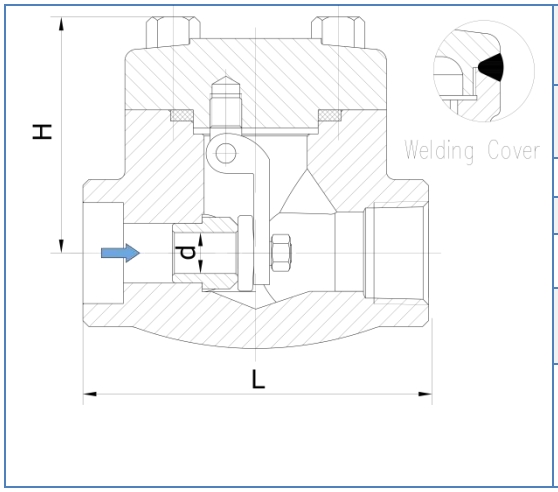

CL800	Bolt Cover(**BC**)/ Welding Cover(**WC**) Reduce Port(**RP**)/Full Port(**FP**) Thread(**NPT**), Socket Weld(**SW**), Butt Weld(**BW**)							
Size (NPS)	**R.P**	1/2	3/4	1	1-1/4	1-1/2	2	2-1/2
	F.P	3/8	1/2	3/4	1	1-1/4	1-1/2	2
Face To Face	L	79	92	111	120	120	140	
Height	H	55	60	80	90	100	105	
Flow Port Diameter	d	10.5	13.5	17	22	28	34	
Weight (Kg)	**B.B**	1.8	2	3.8	4.5	5.5	9	
	W.B	1.7	1.9	3.6	4.3	5.3	8.7	

-

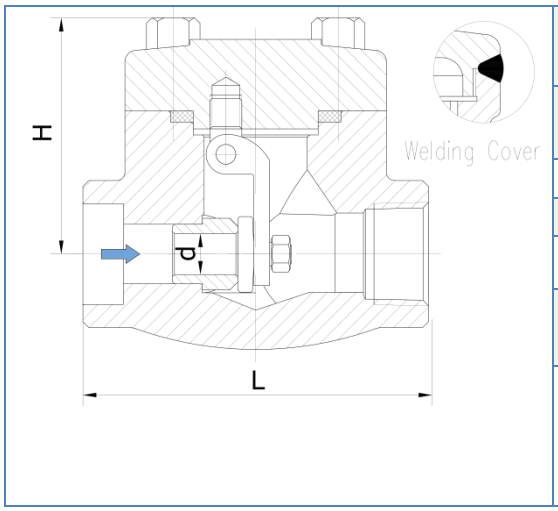

CL900 CL1500	Bolt Cover(**BC**)/ Welding Cover(**WC**) Reduce Port(**RP**)/Full Port(**FP**) Thread(**NPT**), Socket Weld(**SW**), Butt Weld(**BW**),							
Size (NPS)	**R.P**	1/2	3/4	1	1-1/4	1-1/2	2	2-1/2
	F.P	3/8	1/2	3/4	1	1-1/4	1-1/2	2
Face To Face	L	92	111	120	120	140	178	
Height	H	60	80	90	100	105	115	
Flow Port Diameter	d	10.5	13.5	17	22	28	34	
Weight (Kg)	**B.B**	2	3.9	4.5	5.5	9	16	
	W.B	1.9	3.6	4.3	5.3	8.7	15.5	

-

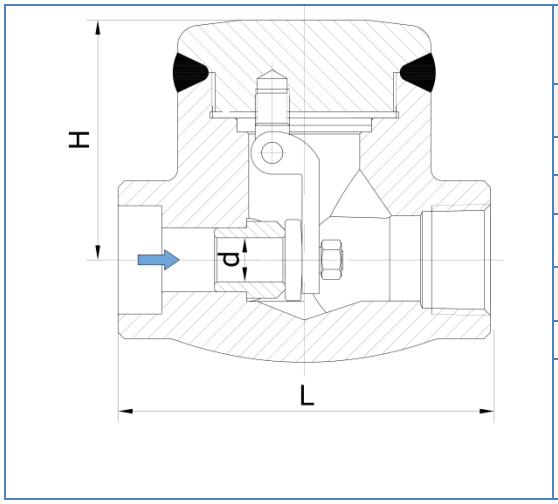

CL2500	Welding Cover(**WC**), Reduce Port(**RP**)/Full Port(**FP**) Thread(**NPT**), Socket Weld(**SW**), Butt Weld(**BW**),							
Size (NPS)	**R.P**	3/8	1/2	3/4	1	1-1/4	1-1/2	2
Face To Face	L		120	120	120	140	178	178
Height	H		90	100	105	115	115	115
Flow Port Diameter	d		10.5	13.5	17	22	28	34
Weight (Kg)	**W.B**		4.5	5.5	9	16	23	23

The dimension and weights are for reference only and subject to change without notice.

1. For more size or dimensional information, please contact our sales representative.

DIMENSIONS AND WEIGHTS (Check Valve - Lift Type)

-

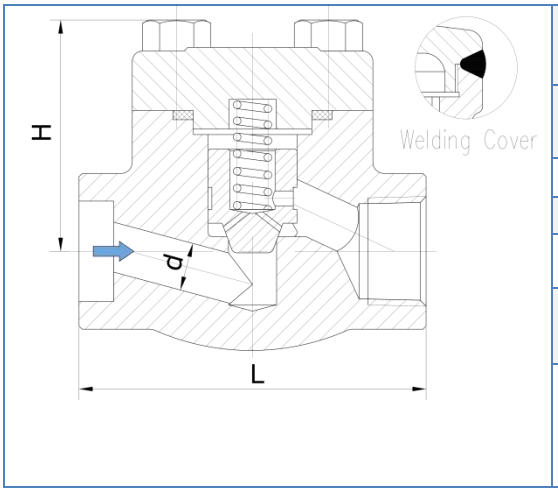

CL800	Bolt Cover(**BC**)/ Welding Cover(**WC**) Reduce Port(**RP**)/ Full Port(**FP**) Thread(**NPT**), Socket Weld(**SW**), Butt Weld(**BW**)							
Size (NPS)	**R.P**	1/2	3/4	1	1-1/4	1-1/2	2	2-1/2
	F.P	3/8	1/2	3/4	1	1-1/4	1-1/2	2
Face To Face	L	79	92	111	120	152	172	
Height	H	55	55	65	80	85	105	
Flow Port Diameter	d	10.5	13.5	17	22	28	34	
Weight (Kg)	**B.B**	1.2	1.5	2.1	3.5	4.8	7.6	
	W.B	1.1	1.3	2	3.3	4.6	7.4	

-

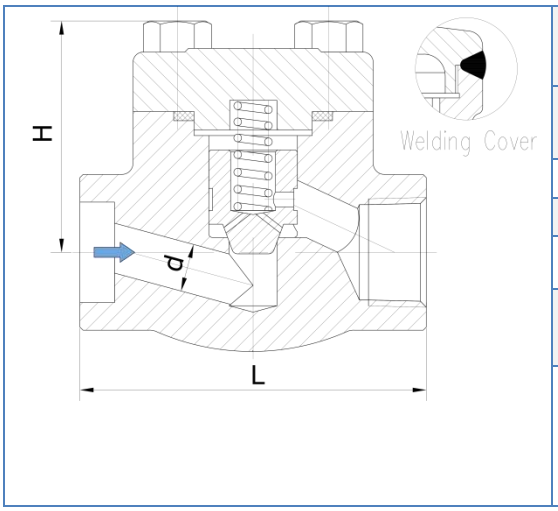

CL900 CL1500	Bolt Cover(**BC**)/ Welding Cover(**WC**) Reduce Port(**RP**)/ Full Port(**FP**) Thread(**NPT**), Socket Weld(**SW**), Butt Weld(**BW**),							
Size (NPS)	**R.P**	1/2	3/4	1	1-1/4	1-1/2	2	2-1/2
	F.P	3/8	1/2	3/4	1	1-1/4	1-1/2	2
Face To Face	L	92	111	120	152	172	220	
Height	H	55	65	80	85	105	115	
Flow Port Diameter	d	10.5	13.5	17	22	28	34	
Weight (Kg)	**B.B**	1.5	2.1	3.5	4.8	7.6	12.5	
	W.B	1.3	2	3.3	4.6	7.4	12.1	

-

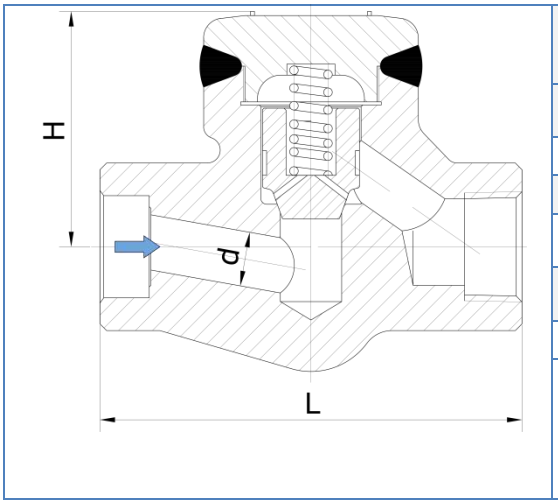

CL2500	Welding Cover(**WC**), Reduce Port(**RP**)/Full Port(**FP**) Thread(**NPT**), Socket Weld(**SW**), Butt Weld(**BW**),							
Size (NPS)	**R.P**	3/8	1/2	3/4	1	1-1/4	1-1/2	2
Face To Face	L		120	120	152	172	220	220
Height	H		80	80	85	105	115	115
Flow Port Diameter	d		10.5	13.5	17	22	28	34
Weight (Kg)	**W.B**		3.5	3.5	4.8	7.6	12.5	12.5

The dimension and weights are for reference only and subject to change without notice.

1. For more size or dimensional information, please contact our sales representative.

DIMENSIONS AND WEIGHTS (Check Valve)

-

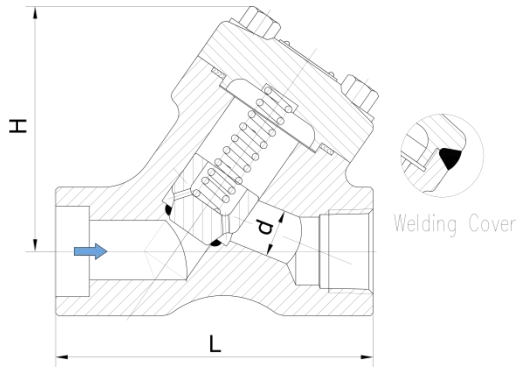

CL800 CL900~CL1500		Bolt Cover(**BC**)/ Welding Cover(**WC**) Full Port(**FP**) Thread(**NPT**), Socket Weld(**SW**), Butt Weld(**BW**)						
Size (NPS)		**F.P**	1/2	3/4	1	1-1/4	1-1/2	2
Face To Face	CL800	L	100	100	120	140	140	172
	CL900 CL1500		100	120	140	140	172	220
Height		H	70	70	70	100	110	120
Flow Port Diameter		d	13.5	17	22	28	34	44
Weight (Kg)	CL800	**B.B**	2.2	2.2	2.2	4.2	9	9
		W.B	2.1	2.1	2.1	4	8.8	8.8
	CL900 CL1500	**B.B**	4.2	9	9	10	18.6	20
		W.B	4	8.8	8.8	9.7	18.2	19.5

-

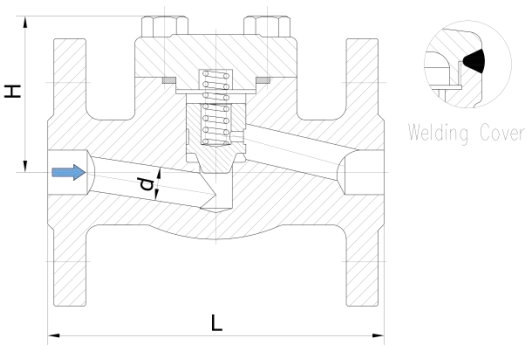

CL150~CL600		Bolt Cover(**BC**)/ Welding Cover(**WC**) Reduce Port(**RP**), Flanged(**RF/RTJ**),						
Size (NPS)		**R.P**	1/2	3/4	1	1-1/4	1-1/2	2
Face To Face	CL150	L (RF)	108	117	127	140	165	203
	CL300		152	178	203	216	229	267
	CL600		165	190	216	229	241	292
Height		H	55	55	65	80	85	105
Flow Port Diameter		d	10.5	13.5	17	22	28	34
Weight (Kg)	CL150	**B.B**	3.5	3.5	4.7	8.5	11.5	13
	CL300		3.5	3.5	5.6	8.6	12	14
	CL600		3.5	3.5	6.5	10.5	16	22

-

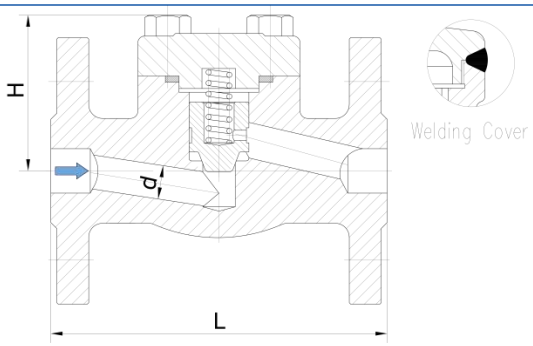

CL900 CL1500		Bolt Cover(**BC**)/ Welding Cover(**WC**) Reduce Port(**RP**), Flanged(**RF/RTJ**),						
Size (NPS)		**R.P**	1/2	3/4	1	1-1/4	1-1/2	2
Face To Face	CL900 CL1500	L (RF)	216	229	254	279	305	368
Height		H	55	55	65	80	85	105
Flow Port Diameter		d	10.5	13.5	17	22	28	34
Weight (Kg)	CL150 CL300	**B.B**	4.5	5.8	8.7	14.5	22	32

The dimension and weights are for reference only and subject to change without notice.

1. The flanged valve are defaulted by integral flange;
2. For more size or dimensional information, please contact our sales representative.

DIMENSIONS AND WEIGHTS (Check Valve - Pressure Seal Cover)

-

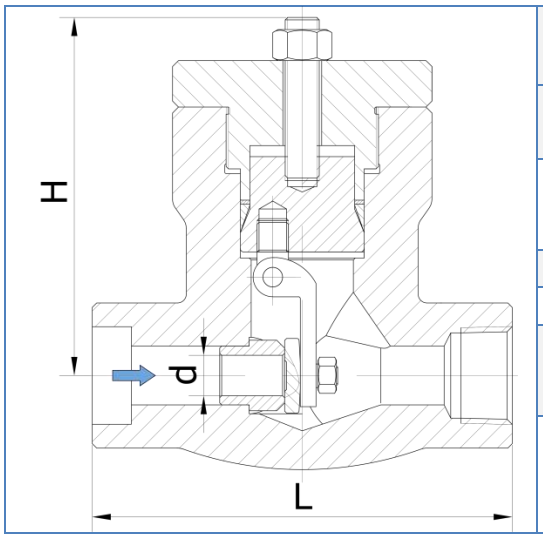

CL900~CL2500		Pressure Seal Bonnet(**PSB**), Reduce Port(**RP**), Thread(**NPT**), Socket Weld(**SW**), Butt Weld(**BW**),							
Size (NPS)		**R.P**	3/8	1/2	3/4	1	1-1/4	1-1/2	2
Face To Face	CL900 CL1500	L	140	140	140	140	178	178	216
	CL2500		182	182	182	182	232	232	272
Height		H	115	115	115	115	150	150	195
Flow Port Diameter		d	8	10.3	13.5	18	23	29	36
Weight (Kg)	CL900 CL1500	**PSB**	7.5	7.5	7.5	7.5	10.5	10.3	22
	CL2500		11.8	11.8	11	11	23	26.5	39

-

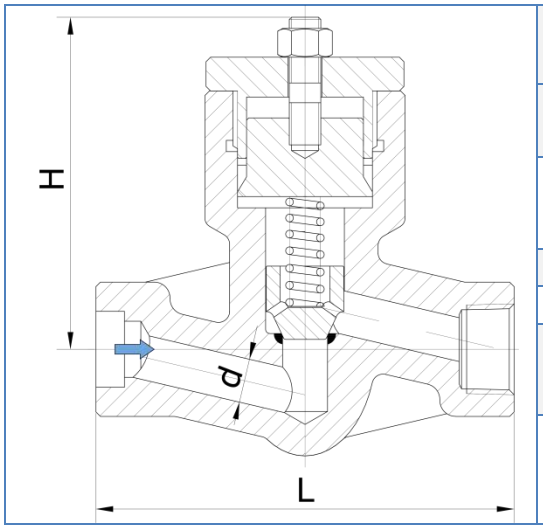

CL900~CL2500		Pressure Seal Bonnet(**PSB**), Full Port(**FP**), OutSide Screw and Yoke(**OS&Y**), Thread(**NPT**), Socket Weld(**SW**), Butt Weld(**BW**),							
Size (NPS)		**R.P**	3/8	1/2	3/4	1	1-1/4	1-1/2	2
Face To Face	CL900 CL1500	L	140	140	140	140	178	178	216
	CL2500		182	182	182	182	232	232	272
Height		H	115	115	115	115	150	150	195
Flow Port Diameter		d	8	13.5	17	22	28	34	42
Weight (Kg)	CL900 CL1500	**PSB**	7.5	7.5	7.5	7.5	10.5	10.3	22
	CL2500		11.8	11.8	11	11	23	26.5	39

-

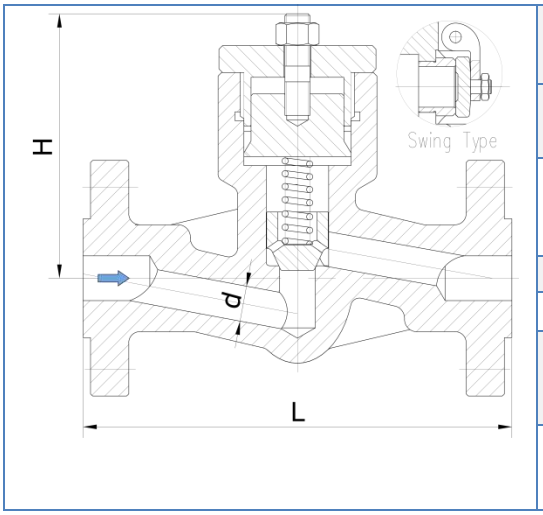

CL900~CL2500		Pressure Seal Bonnet(**PSB**), Reduce Port(**RP**), Flanged(**RF/RTJ**),							
Size (NPS)		**R.P**	3/8	1/2	3/4	1	1-1/4	1-1/2	2
Face To Face	CL900 CL1500	L (RF)		216	229	254	279	305	368
	CL2500			264	273	308	349	384	451
Height		H		115	115	115	150	150	195
Flow Port Diameter		d		13.5	17	22	28	34	42
Weight (Kg)	CL900 CL1500	**PSB**		10.5	12	14	20	27	33
	CL2500			13	15	17	25	30	35

1. The flanged valve are defaulted by integral flange;
2. The dimension and weights are for reference only and subject to change without notice.
3. For more dimensional information, please contact our sales representative.

OVERVIEW (SPECIAL TYPE FORGE STEEL VALVE)

-

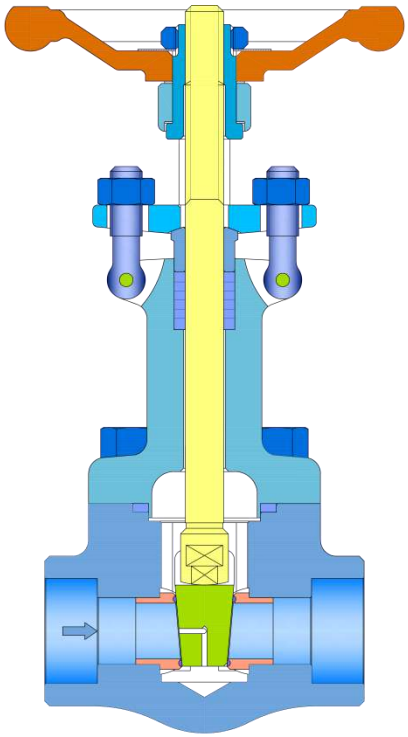	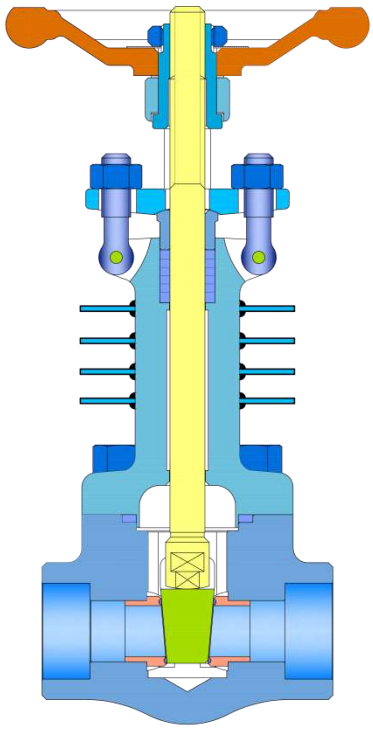	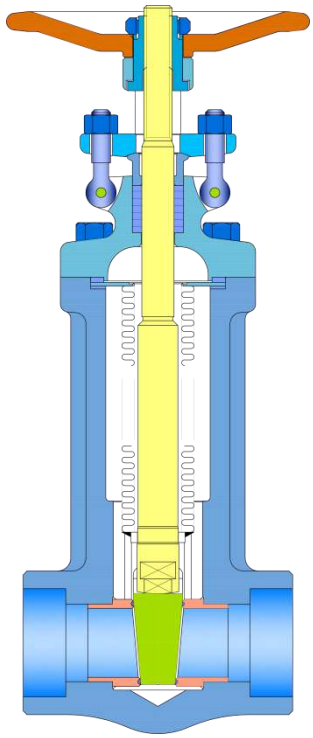
Low Temperature Extension	High Temperature Extension	Bellow Seal Extension
Structure characteristics: 1. The bonnet are extended for low temperature service, the packing position are raised to avoid the freeze of packing which will affect packing sealing performance; 2. The gate valve shall have relief hole on upstream direction while the pressure may remain in the cavity; 3. Low temperature cold isolation can be an option to prevent cold heat exchange	Structure characteristics: 1. The high temperature extended structure is mainly to prevent scald operator during operation. 2. The cooling fin can be selected to help heat radiation.	Structure characteristics: 1. Bellow seal extension has the bellow inside of the cavity, the effective compression of the bellows must be greater than the opening stroke of the valve; 2. Bellow seal structure can effectively reduce the leakage of valve stem, the primary seal is for bellows and secondary seal as a filler.
1. The above schematics for extension are based on gate valves , it can apply to both forged gate and globe valve; 2. Welded bonnet is available other than the above mentioned bolted bonnet.		

VALVE FIGURE NUMBER

HOW TO ORDER

	Nominal Size	Valve Type	Pressure Rating	End Conn.	Construct-ion	Body Material	Trim Material	Seat	O-ring	Operation Mode
	A	B	C	D	E	F	G	H	I	J
e.g.	R 1	C H	8	s	1	C 1	0 1	R	0	X

is a NPS 1x3/4 Class 800, Check Valve, Swing Type ,Socket Welding, A105 body, 13Cr Trim, Renewable Seat, No O-ring, NoOperated.

A Nominal Size

- **00** Special
- **F1** 3/8 (DN 10)
- **F2** 1/2 (DN 15)
- **0R** 1/2 RB
- **F3** 3/4 (DN 20)
- **R0** 3/4 RB
- **01** 1 (DN 25)
- **R1** 1 RB
- **F4** 1 ¼ (DN 32)
- **1R** 1 ¼ RB
- **F5** 1 ½ (DN 40)
- **2R** 1 ½ RB
- **02** 2 (DN 50)
- **R2** 2 RB
- **F6** 2 ½ (DN 65)
- **3R** 2 ½ RB
- **03** 3 (DN 80)
- **R3** 3 RB
- **04** 4 (DN 100)
- **R4** 4 RB

B Valve Type

- **GA** Gate Valve
- **GL** Globe Valve
- **CH** Check Valve

C Pressure Rating

- **0** Special
- **1** Class 150
- **3** Class 300
- **5** Class 1500
- **6** Class 600
- **7** Class 2500
- **9** Class 900
- **8** Class 800
- **2** Class 125(PN16)
- **4** Class 400(PN64)

D End Connection

- **X** Special
- **R** RF Flanged
- **J** RTJ Flanged
- **F** FF Flanged
- **T** Threaded
- **B** Butt-Weld (BW)
- **S** Socket-Weld (SW)
- **W** Wafer
- **L** Lug

E Construction

GA

- **1** Flexible wedge, Bolted Bonnet
- **2** Flexible wedge, Welded Bonnet
- **3** Flexible wedge, Pressure Seal
- **4** Flexible wedge, Bellow Seal
- **5** Solid wedge, Bolted Bonnet
- **6** Solid wedge, Welded Bonnet
- **7** Solid wedge, Pressure Seal
- **8** Solid wedge, Bellow Seal

GL

- **1** Straight pattern, Bolted Bonnet
- **2** Straight pattern, Welded Bonnet
- **3** Straight pattern, Pressure Seal
- **4** Y- pattern, Bolted Bonnet
- **5** Y- pattern, Welded Bonnet
- **6** Y- pattern, Pressure Seal

CH

- **1** Swing, Bolt Cover
- **2** Swing, welded Cover
- **3** Swing, Pressure Seal
- **4** Lift Type, Bole Cover
- **5** Lift Type, Welded Cover
- **6** Single Plate, Wafer
- **7** Dual Plate
- **8** Lift Type, Pressure Seal

F Body Material

- **X0** Special
- **C1** A105
- **M1** A182 F1
- **M3** A182 F2
- **M5** A182 F12 CL 2
- **M7** A182 F11 CL 2
- **M9** A182 F22 CL 3
- **E1** A182 F5
- **E5** A182 F9
- **E7** A182 F91
- **L1** A350 LF1
- **L3** A350 LF2
- **L5** A350 LF3
- **L7** A350 LF5
- **L9** A350 LF6
- **LA** A350 LF9
- **S1** A182 F304
- **S3** A182 F304L
- **S5** A182 F316
- **S7** A182 F316L
- **S9** A182 F347
- **D1** A182 F51
- **D3** A182 F53
- **D5** A182 F55

G Trim Material

- **00** Special
- **01** 13Cr/13Cr/13Cr
- **02** 304/304/304
- **03** 310/310/310
- **04** Hard 13Cr/Hard 13Cr/13Cr
- **05** Stellite /Stellite /13Cr
- **06** 13Cr/Cu-Ni/13Cr
- **07** 13Cr/Hard 13Cr /13Cr
- **08** 13Cr/Stellite /13Cr
- **09** Monel/Monel /Monel
- **10** 316/316/316
- **11** Monel/Stellite/Monel
- **12** 316/Stellite/316
- **13** Alloy 20/Alloy 20 /Alloy 20
- **14** Alloy 20/Stellite /Alloy 20
- **15** Stellite /Stellite /304
- **16** Stellite /Stellite /316
- **17** Stellite /Stellite /347
- **18** Stellite /Stellite /Alloy 20
- **20** 304L /304L /304L
- **21** 316L /316L /316L
- **22** 321 /321 /321
- **23** F55 /F55/F55
- **24** F51/F51 /F51
- **25** F53 /F53 /F53
- **32** 316L /Stellite /316L
- **33** Stellite /Stellite /316L
- **34** 304L /Stellite /304L
- **35** Stellite /Stellite /304L

H Seat

- **H** HNBR
- **E** EPDM
- **V** VITON
- **B** BUNA
- **R** Renewable Metal
- **N** Non Renewable Metal

I O-Ring

- **0** None
- **1** Viton
- **2** Teflon
- **3** HNBR
- **4** NBR
- **5** Special
- **6** EPDM
- **7** FVMQ
- **8** FFKM
- **9** AFLAS

J Operation

- **B** Bare Stem
- **L** Lever
- **G** Gearbox
- **P** Pneumatic
- **E** Electric
- **C** Gear w/ Chain
- **N** Pneumatic-Hydraulic
- **S** Solid Lever
- **D** Lever with locking device
- **R** Solid lever with locking device

HOW THE FIGURE NUMBER SYSTEM WORKS

Introduction. Figure number system uses a code consisting 14 digits of letters and numbers to represent the specification of a valve of certain specification. Of 14 digits, they are separated into 10 groups identified by letters from A to J. Each group represents a parameter of a valve, together they contain almost all the essential parameters of the valve.

Uses. To use the figure number system to generate a code is easy. Under each group, the code is shown on the left while on the right is the meaning of the code. Start by selecting a code from group A, through group J. If the specification of the valve is not listed, select the code for "Special ". The total length of the figure number shall be exactly 14 digits.

Cautions. It is advised that you have as detailed the specification as possible to generate a figure number, which means eliminating "Specials". If you don't have enough specification or information about the valve you are ordering, or you're not sure how to use the system to generate a figure number, contact one of our sales representatives for help.

Note: ERREESSE reserves the right to make any modifications without notice.

Offshore

Pipeline

ERREESSE

Onshore

Refinery

IMPORTANT NOTICE

- All dimensions in inches not listed in standards are converted from millimeters. Weights in lbs (pounds) are converted from kilograms.
- Data listed in the catalog, including dimensions, weights, specifications and other valve related data are intended to provide general information and guidance only.

ERREESSE Valve GmbH

Berlin Kreuz Berg District ÿ Germany T +49 303 1879831 www.erreesse.de

F +49 303 1879834 E info@erreesse.de