ERREESSE Valve GmbH

GATE VALVE

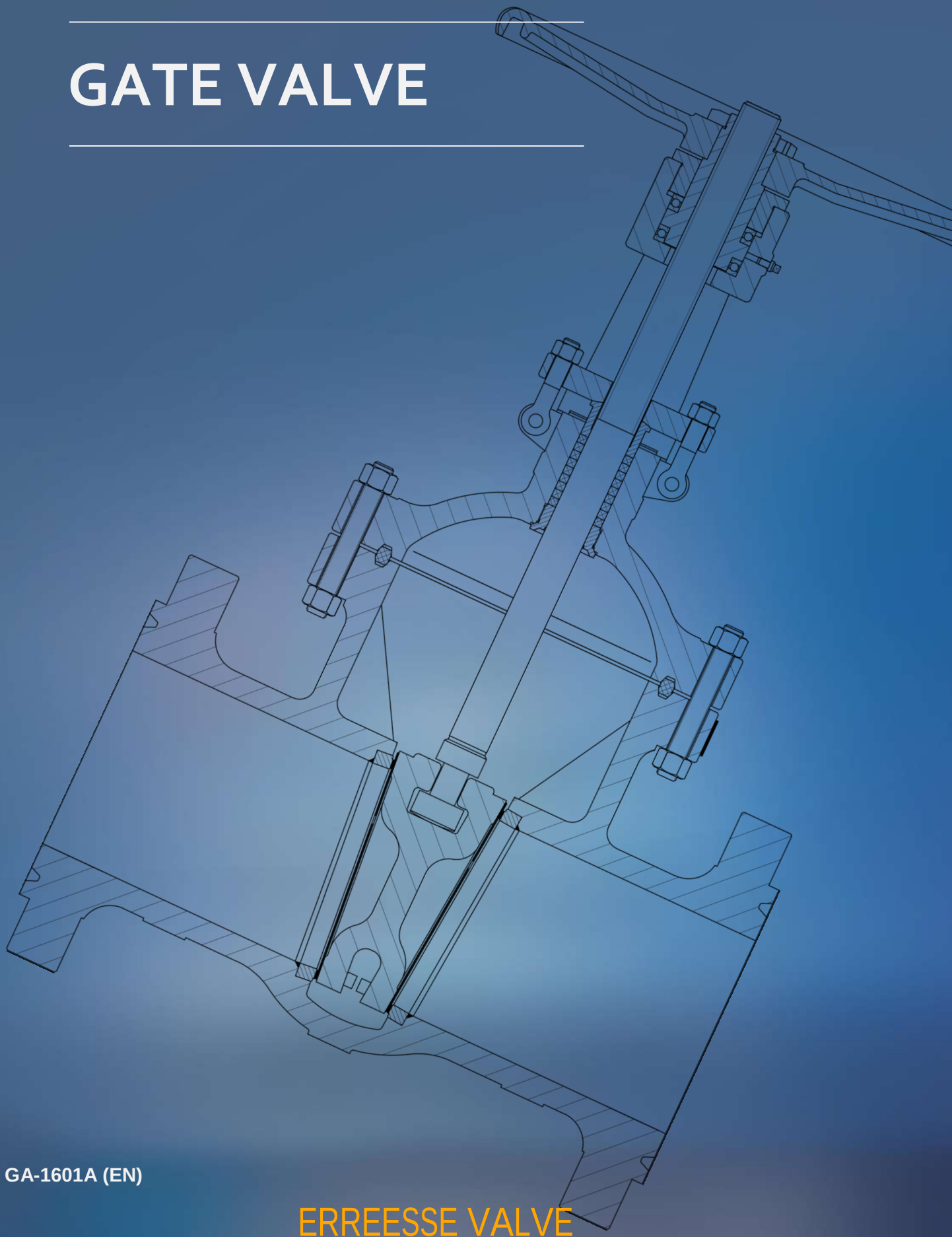

GA-1601A (EN)

ERREESSE VALVE

TABLE OF INDEX	*PAGE*

Introduction, *Features*	*3*
Scope of Products	*4*
Overview Gate Valve (Bolt Bonnet)	*5*
Dimensions and Weights	6
Class 150 (PN 20)	*6*
Class 300(PN 50)	*7*
Class 600(PN 100)	*8*
Class 900(PN 150)	*9*
Class 1500(PN 250)	*10*
Overview Gate Valve (Pressure Seal Bonnet)	*11*
Dimensions and Weights	*12*
Class 900 (PN 150)	*12*
Class 1500 (PN 250)	*13*
Class 2500 (PN 420)	*14*
Special Type(Extent Bonnet)	*15*
Valve Figure Number, *How To Order*	*16-17*

This page is intentionally left blank.

INTRODUCTION

ERREESSE cast gate valves are offered by default with flexible gate, renewable seat, rising stem and non-ring hand wheel. It plays the role of pipe opening and closing ultimately through the rotation of the hand wheel to drive the lifting of gate;

Bolted bonnet, pressure bonnet, bellow seal bonnet, high/low temperature extended bonnet and ISO 15848 fugitive emission designed valves are available upon different request of services;

Forged body can also be provided upon special request.

Design of Disc

Cast steel gate valve are made with flexible wedge by default, solid wedge will be provided only upon request.

Design of Seat

Renewable seat and non-renewable seat are optional, the default for WCB bod y is seal welded seat, and body overlay seat against other vale body material.

Design of Body -Bonnet Connection

Bolted bonnet is normally applied on CL150~CL900, body seal is defaulted by gasket and RTJ ring; Pressure seal bonnet is applied on CL1500~CL2500 with pressure seal ring for body seal;

Design of Packing

By default graphite packing is used, PTFE packing an be used on corrosive media. API 622 fugitive emission packing will be used upon request;

Design of Backseat

Renewable back seat is applied on all carbon steel and low alloy steel valve, however, body back seat is applied for stainless steel valve;

Design of Actuation

Hand wheel and gear box are normally designed for cast gate valve based on different size and pressure rating; Electric, pneumatic or Chain wheel operation can be provided upon request.

SCOPE OF PRODUCTS

Gate Valve

Legends: **A** –Available in Bolt Bonnet
B–Available in Pressure Seal Bonnet
C–Not Usually Required

Size in/mm	Class 150 PN 20	Class 300 PN 50	Class 600 PN 100	Class 900 PN 150	Class 1500 PN 250	Class 2500 PN 420
2 *50*	A	A	A	A, B	A, B	A, B
3 *65*	A	A	A	A, B	A, B	A, B
4 *80*	A	A	A	A, B	A, B	A, B
5 *100*	A, C	A, C	A, C	A, B,C	A, B,C	A, B,C
6 *150*	A	A	A	A, B	A, B	A, B
8 *200*	A	A	A	A, B	A, B	A, B
10 *250*	A	A	A	A, B	A, B	A, B
12 *300*	A	A	A	A, B	A, B	A, B
14 *350*	A	A	A	A, B	A, B	C
16 *400*	A	A	A	A, B	A, B	C
18 *450*	A	A	A	A, B	A, B	C
20 *500*	A	A	A	A, B	A, B	C
22 *550*	A	A	A	A, B,C	A, B,C	C
24 *600*	A	A	A	A, B	A, B	C
26 *650*	A	A	A	A, B	A, B	
28 *700*	A	A	A	A, B	A, B	
30 *750*	A	A	A	A, B	A, B	
32 *800*	A	A	A	A, B		
34 *850*	A	A	A	A, B		
36 *900*	A	A	A	A, B		
38 *950*	A, E	A, E	A	A, B		
40 *1000*	A, E	A, E	A	A, B		
42 *1050*	A, E	A, E	A	A, B		
48 *1200*	A, E	A, E	A	A, B		

1. The sizes listed above are normal diameters. Contact our sales representative if any other dimensions are requested.

OVERVIEW (Bolt Bonnet)

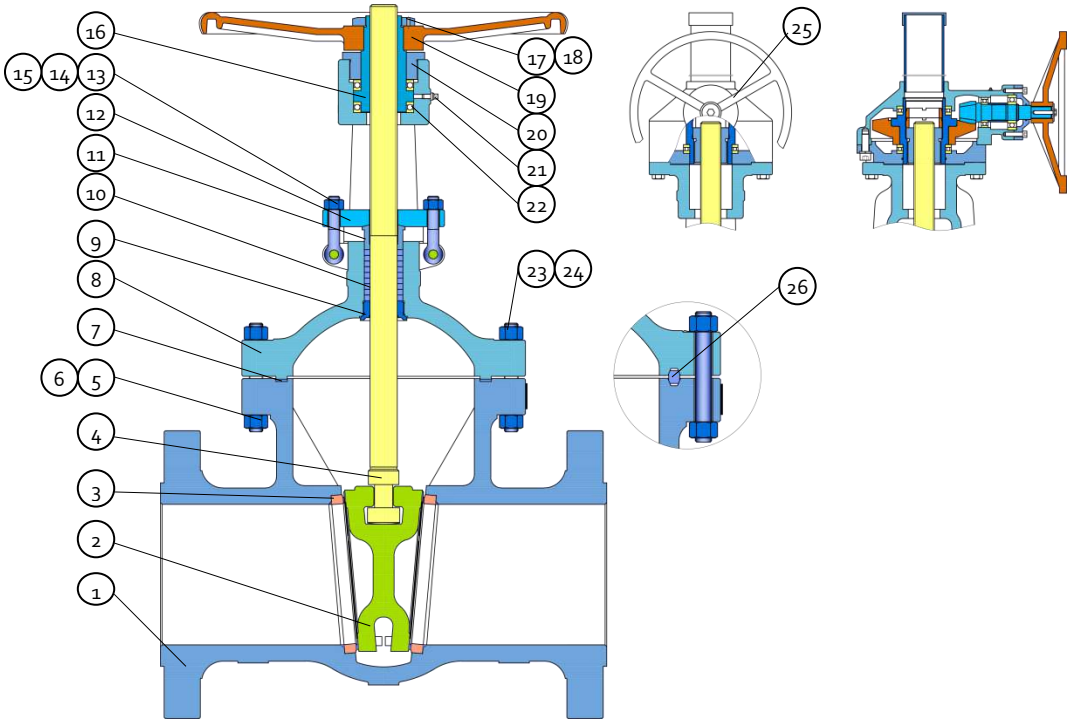

Part List

1 Body	7 Gasket	13 Eye Bolt	19 Handwheel	25 Gear
2 Wedge	8 Bonnet	14 Nut	20 Bearing Nut	26 Octagonal Ring
3 Seat	9 Backseat	15 Pin	21 Lubricating Nipple	
4 Stem	10 Packing	16 Stem Nut	22 Bearing	
5 Stud	11 Gland	17 Handwheel Nut	23 Stud	
6 Nut	12 Gland Flange	18 Screw	24 Nut	

Standards

Design & Manufacture	API 600, ASME B16.34, MSS SP-144	
Face-to-face	ASME B16.10	
End Dimension	ASME B16.5 (RF, RTJ), ASMEB16.47(RF,RTJ) ASME B16.25 (BW)	
Test & Inspection	API 598	
Typical Materials	Body, Bonnet,Disc	(Casting): A216 WCB, A351 CF3, CF8, CF3M, CF8M, A995 4A, 5A, A352 LCB, LCC, LC
		(Forging): A105, A350 LF2, LF3, LF5, A182 F304, F304L, F316, F316L, F51, F53, F5,F11,F22,F91, Monel, Inconel, Hastelloy
	Stem	A182 F6a, F304, F304L, F316, F316L, F51, F53,F55 Monel, Inconel, Hastelloy

DIMENSIONS AND WEIGHTS (Bolt Bonnet) *ASME CLASS 150 (PN 20)*

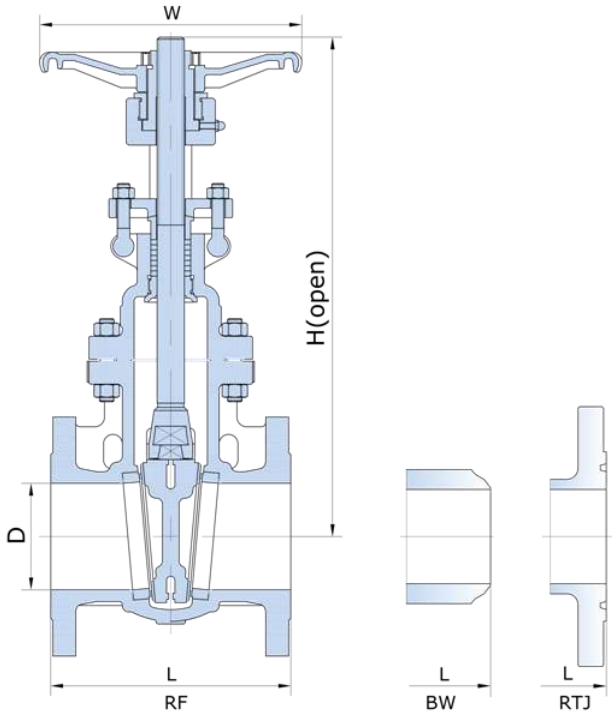

ASME CLASS 150 (PN 20)

Size *in/mm*	D	L			H	W	Weight
		RF	RTJ	BW			RF/BW *(lb/kg)*
2 *50*	2 *51*	7 *178*	7.5 *191*	8.5 *216*	15.87 *403*	7.87 *200*	40/33 18/15
2 ½ *65*	2.5 *64*	7.5 *190*	8 *203*	9.5 *241*	18.9 *480*	7.87 *200*	55/40 25/18
3 *80*	3 *76*	8 *203*	8.5 *216*	11.12 *283*	20.12 *511*	9.84 *250*	70/57 32/26
4 *100*	4 *100*	9 *229*	9.5 *242*	12 *305*	23.7 *602*	11 *280*	110/90 50/41
5 *125*	5 *125*	10 *254*	10.5 *267*	15 *381*	30.91 *785*	11.81 *300*	143/130 65/59
6 *150*	6 *150*	10.5 *267*	11 *280*	15.88 *403*	34.84 *885*	11.81 *300*	170/152 77/69
8 *200*	8 *203*	11.5 *292*	12 *305*	16.5 *419*	38.5 *978*	13.78 *350*	267/238 121/108
10 *250*	10 *250*	13 *330*	13.5 *343*	18 *457*	46.93 *1192*	15.75 *400*	392/344 178/156
12 *300*	12 *305*	14 *356*	14.5 *369*	19.75 *502*	55 *1397*	17.72 *450*	584/546 265/248
14 *350*	14 *337*	15 *381*	15.5 *394*	22.5 *572*	62.32 *1583*	19.69 *500*	800/727 363/330
16 *400*	15.24 *387*	16 *406*	16.5 *419*	24 *610*	67.76 *1721*	23.62 *600*	1020/934 463/424
18 *450*	17.24 *438*	17 *432*	17.5 *445*	26 *660*	76.77 *1950*	26.77 *680*	1368/1293 621/587
20 *500*	19.25 *489*	18 *457*	18.5 *470*	28 *711*	85.35 *2168*	28.35 *720*	1744/1656 792/752
22 *550*	21.26 *540*	20 *508*	20.5 *521*	30 *762*	92.52 *2350*	29.53 *750*	2313/2093 1050/950
24 *600*	23.27 *591*	20 *508*	20.5 *521*	32 *813*	105 *2668*	29.53 *750*	2621/2520 1190/1144
26 *650*	25.24 *641*	22 *559*	-	34 *864*	-	-	3350/3458 1521/1570
28 *700*	27.24 *692*	24 *610*	-	36 *914*	-	-	4048/4185 1838/1900
30 *750*	29.25 *743*	24 *610*	-	36 *914*	-	-	24980/6608 261/3000

The dimension and weights are for reference only and subject to change without notice.

1. For more dimensional information, please contact our sales representative.
2. “W” on above schematic is the diameter for hand wheel, the one without dimension on the table above is defaulted by gear operation.

DIMENSIONS AND WEIGHTS (Bolt Bonnet) *ASME CLASS 300 (PN 50)*

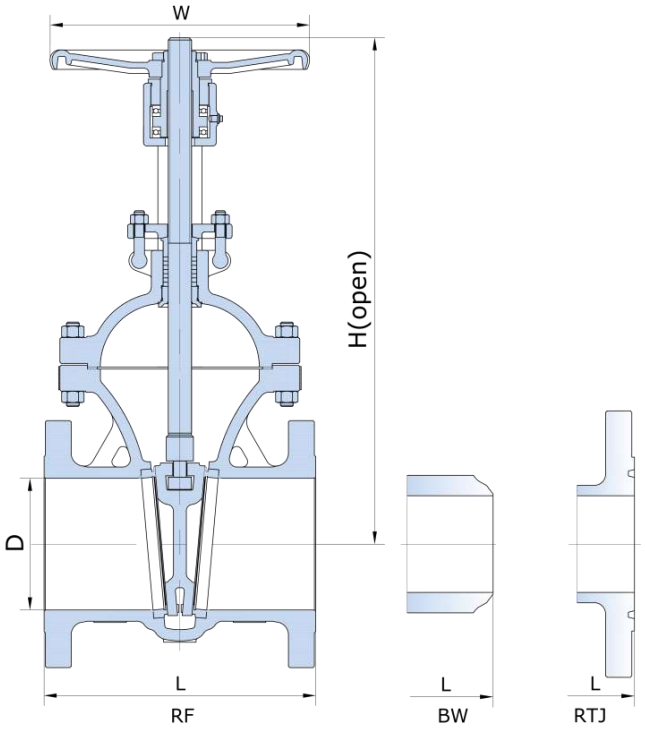

ASME CLASS 300 (PN 50)

Size *in/mm*	D	L			H	W	Weight
		RF	RTJ	BW			RF/BW *(lb/kg)*
2 *50*	2 *51*	*8.5* *216*	*9.13* *232*	*8.5* *216*	*17.05* *433*	*7.87* *200*	*51/37* *23/17*
2 ½ *65*	2.5 *64*	*9.5* *241*	*10.12* *257*	*9.5* *241*	*18.54* *471*	*7.87* *200*	*77/57* *35/26*
3 *80*	3 *76*	*11.1* *282*	*11.73* *298*	*11.1* *282*	*21.06* *535*	*9.84* *250*	*110/86* *50/39*
4 *100*	4 *100*	*12* *305*	*12.64* *321*	*12* *305*	*24.7* *627*	*11* *280*	*156/117* *71/53*
5 *125*	5 *125*	*15* *381*	*15.63* *397*	*15* *381*	*28.15* *715*	*11.81* *300*	*256/200* *116/91*
6 *150*	6 *150*	*15.87* *403*	*16.5* *419*	*15.87* *403*	*32.44* *824*	*13.78* *350*	*317/249* *144/113*
8 *200*	8 *203*	*16.5* *419*	*17.13* *435*	*16.5* *419*	*39.53* *1004*	*15.75* *400*	*460/361* *209/164*
10 *250*	10 *250*	*18* *457*	*18.62* *473*	*18* *457*	*49.61* *1260*	*17.72* *450*	*709/564* *322/256*
12 *300*	12 *305*	*19.76* *502*	*20.39* *518*	*19.76* *502*	*58.27* *1480*	*19.7* *500*	*1062/859* *482/390*
14 *350*	14 *337*	*30* *762*	*30.63* *778*	*30* *762*	*63.19* *1605*	-	*1504/1244* *683/565*
16 *400*	*15.24* *387*	*33* *838*	*33.62* *854*	*33* *838*	*71.06* *1805*	-	*2093/1773* *950/805*
18 *450*	*17* *432*	*36* *914*	*36.61* *930*	*36* *914*	*78.54* *1995*	-	*2522/2126* *1145/965*
20 *500*	*19* *483*	*39* *991*	*39.76* *1010*	*39* *991*	*94.69* *2405*	-	*3601/3106* *1635/1410*
22 *550*	*21.8* *553*	*43* *1092*	*43.86* *1114*	*43* *1092*	*100.4* *2550*	-	*5176/4626* *2350/2100*
24 *600*	*23* *584*	*45* *1143*	*45.87* *1165*	*45* *1143*	*104.33* *2650*	-	*5859/5077* *2660/2305*
26 *650*	*25* *635*	*49* *1245*	*50* *1270*	*49* *1245*	*116.14* *2950*	-	*6806/5595* *3090/2540*
28 *700*	*27* *686*	*53* *1346*	*54* *1371*	*53* *1346*	*122.05* *3100*	-	*7291/6002* *3310/2725*
30 *750*	*29* *736*	*55* *1397*	*56* *1422*	*55* *1397*	*126* *3200*	-	*7919/6729* *3595/3055*

The dimension and weights are for reference only and subject to change without notice.

1. For more dimensional information, please contact our sales representative.
2. “W” on above schematic is the diameter for hand wheel, the one without dimension on the table above is defaulted by gear operation.

DIMENSIONS AND WEIGHTS (Bolt Bonnet) *ASME CLASS 600 (PN 100)*

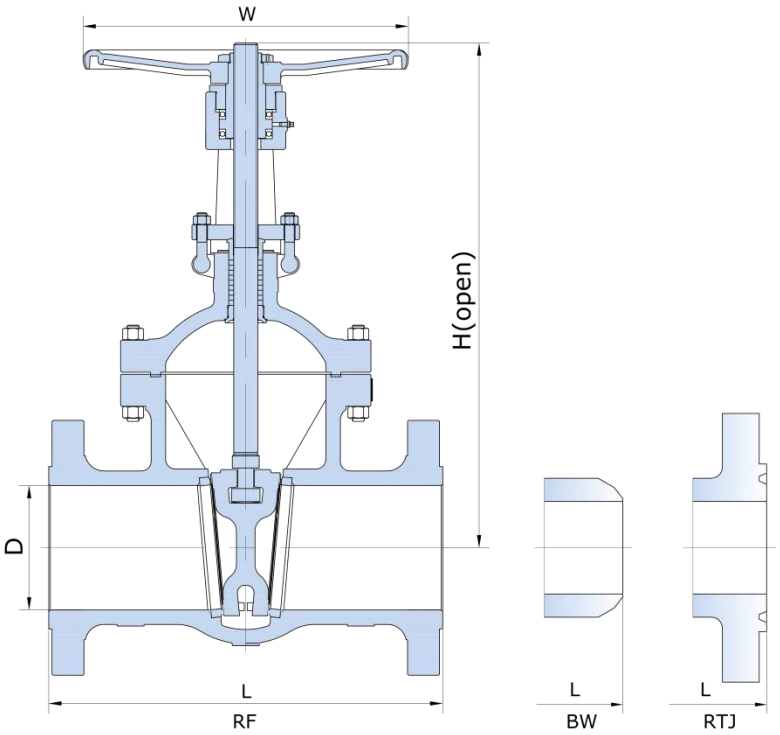

ASME CLASS 600 (PN 100)

Size *in/mm*	D	L			H	W	Weight
		RF	RTJ	BW			RF/BW *(lb/kg)*
2 *50*	2 *51*	11.5 *292*	11.63 *295*	11.5 *292*	*16.5* *418*	*441* *200*	*79/64* *36/29*
2 ½ *65*	2.5 *64*	13 *330*	13.13 *333*	13 *330*	*18.75* *476*	*551* *250*	*115/93* *52/42*
3 *80*	3 *76*	14 *356*	14.13 *359*	14 *356*	*20.38* *518*	*617* *280*	*148/117* *67/53*
4 *100*	4 *100*	17 *432*	17.13 *435*	17 *432*	*25.5* *646*	*661* *300*	*247/183* *112/83*
5 *125*	5 *125*	20 *508*	2012 *511*	20 *508*	*29.5* *750*	*881* *400*	*330/267* *150/121*
6 *150*	6 *150*	22 *559*	22.13 *562*	22 *559*	*33* *840*	*991* *450*	*374/275* *170/125*
8 *200*	*7.87* *200*	26 *660*	26.13 *663*	26 *660*	*40.38* *1025*	*1100* *500*	*866/683* *393/310*
10 *250*	9.76 *248*	31 *787*	31.13 *790*	31 *787*	*48.38* *1230*	*23.62* *600*	*1344/1040* *610/472*
12 *300*	*11.73* *298*	33 *838*	33.13 *841*	33 *635*	*57* *1450*	*23.62* *600*	*1960/1608* *890/730*
14 *350*	*12.87* *327*	35 *889*	35.12 *891*	35 *889*	*62* *1575*	-	*2742/2324* *1245/1055*
16 *400*	*14.76* *375*	39 *991*	39.13 *994*	39 *991*	*70.62* *1795*	-	*3370/2731* *1530/1240*
18 *450*	*16.5* *419*	43 *1092*	43.13 *1095*	430 *1092*	*76* *1930*	-	*4317/2786* *1960/1625*
20 *500*	*18.27* *464*	47 *1194*	47.25 *1200*	47 *1194*	*87* *2210*	-	*5396/4471* *2450/2030*
22 *550*	*20.12* *511*	51 *1295*	51.38 *1305*	51 *1295*	*97.24* *2470*	-	*6123/4956* *2780/2250*
24 *600*	*22* *559*	55 *1397*	55.38 *1407*	55 *1397*	*101.5* *2580*	-	*6597/5705* *2995/2590*
26 *650*	*23.74* *603*	57 *1448*	57.5 *1461*	57 *1448*	*105* *2665*	-	*7654/6289* *3475/2855*
28 *700*	*25.51* *648*	61 *1549*	61.5 *1562*	61 *1594*	*109.5* *2780*	-	*8205/6751* *3725/3065*
30 *750*	*27.36* *695*	65 *1651*	65.5 *1664*	65 *1651*	*114* *2895*	-	*8910/7489* *4045/3400*

The dimension and weights are for reference only and subject to change without notice.

1. For more dimensional information, please contact our sales representative.
2. “W” on above schematic is the diameter for hand wheel, the one without dimension on the table above is defaulted by gear operation.

DIMENSIONS AND WEIGHTS (Bolt Bonnet) *ASME CLASS 900 (PN 150)*

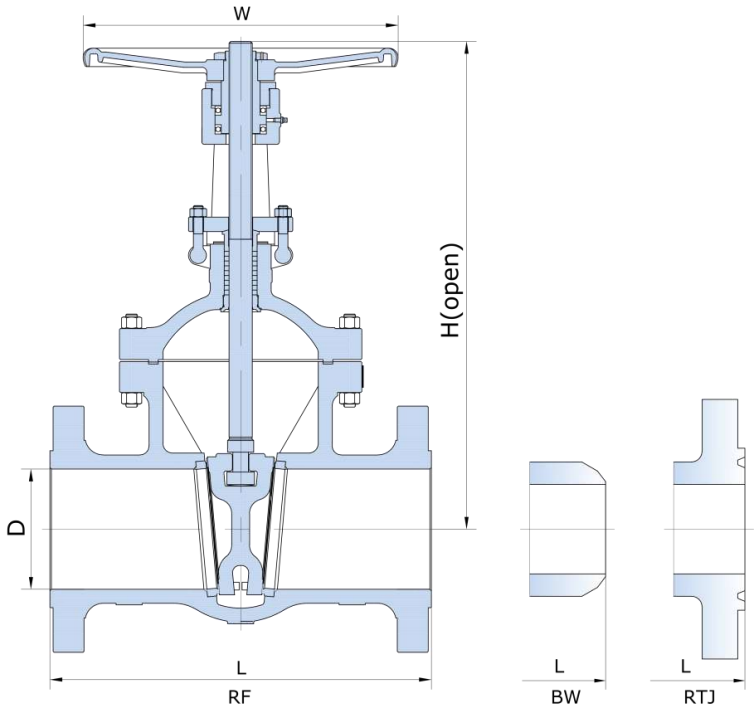

ASME CLASS 900 (PN 150)

Size *in/mm*	D	L			H	W	Weight
		RF	RTJ	BW			RF/BW *(lb/kg)*
2 *50*	*1.87* *47.5*	14.5 *368*	14.63 *371*	14.5 *368*	*19.62* *498*	*7.87* *200*	*163/119* *74/54*
2 ½ *65*	*2.24* *57*	16.5 *419*	16.62 *422*	16.5 *419*	*21.5* *547*	*9.84* *250*	*222/172* *101/78*
3 *80*	*2.87* *73*	15 *381*	15.13 *384*	15 *381*	*22.5* *573*	*11.81* *300*	*289/231* *131/105*
4 *100*	*3.86* *98*	18 *457*	18.13 *460*	18 *457*	*26.62* *678*	*17.72* *450*	*379/297* *172/135*
5 *125*	*4.76* *121*	22 *559*	22.13 *562*	22 *559*	*35.5* *900*	*19.7* *500*	*615/463* *276/210*
6 *150*	*5.75* *146*	24 *610*	24.13 *613*	24 *610*	*38.2* *970*	*19.7* *500*	*378/573* *335/260*
8 *200*	*7.48* *190*	29 *737*	29.13 *740*	29 *737*	*43.5* *1103*	*23.62* *600*	*1410/1134* *640/515*
10 *250*	*9.37* *238*	33 *838*	33.13 *841*	33 *838*	*53* *1345*	-	*2423/2026* *1100/920*
12 *300*	*11.1* *282*	38 *965*	38.13 *968*	38 *965*	*60* *1525*	-	*3546/3040* *1600/1380*
14 *350*	*12.24* *311*	40.5 *1029*	40.88 *1039*	40.5 *1029*	*74.5* *1900*	-	*4956/4427* *2250/2010*
16 *400*	*14* *356*	44.5 *1130*	44.88 *1140*	44.5 *1130*	*81* *2055*	-	*6278/5650* *2850/2565*
18 *450*	*15.75* *400*	48 *1219*	48.5 *1232*	48 *1219*	*87* *2215*	-	*6740/5474* *3060/2485*
20 *500*	*17.52* *445*	52 *1321*	52.5 *1334*	52 *1321*	*101* *2565*	-	*8447/7159* *3835/3250*
24 *600*	*21* *533*	61 *1549*	61.75 *1568*	61 *1549*	*104* *2640*	-	*10793/8954* *4900/4065*

The dimension and weights are for reference only and subject to change without notice.

1. For more dimensional information, please contact our sales representative.
2. “W” on above schematic is the diameter for hand wheel, the one without dimension on the table above is defaulted by gear operation.

DIMENSIONS AND WEIGHTS (Bolt Bonnet) *ASME CLASS 1500 (PN 250)*

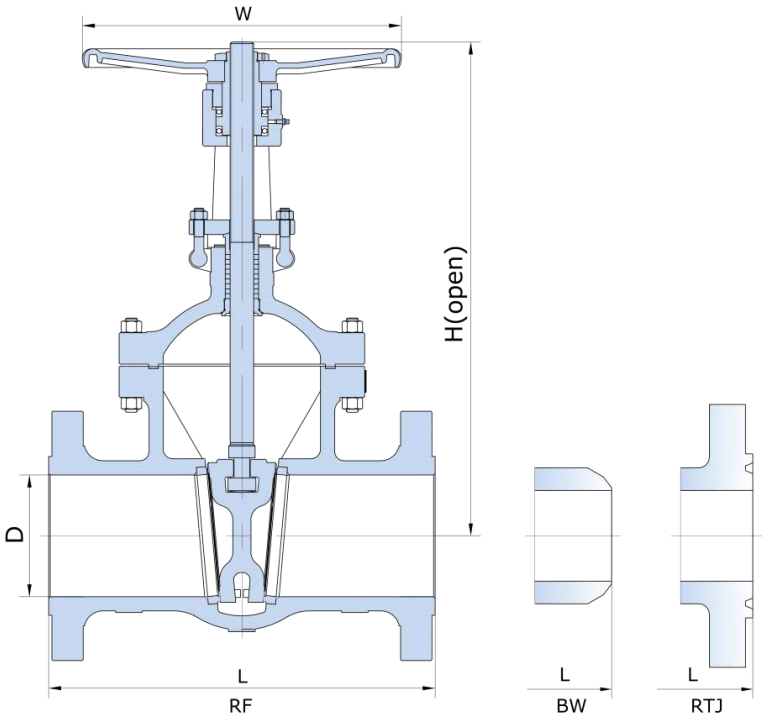

ASME CLASS 1500 (PN 250)

Size *in/mm*	D	L			H	W	Weight
		RF	RTJ	BW			RF/BW *(lb/kg)*
2 50	1.87 47.5	14.5 368	14.61 371	14.5 368	24.25 615	10 250	256/231 116/105
2 ½ 65	2.24 57	16.5 419	16.61 422	16.5 419	26 658	12 300	366/330 166/150
3 80	2.76 70	18.5 470	18.62 473	18.5 470	30 760	18 450	460/414 209/188
4 100	3.58 91	21.5 546	21.61 549	21.5 546	34.12 868	20 500	652/584 296/265
5 125	4.73 111	26.5 673	26.61 676	26.5 673	38.4 975	24 600	958/826 435/375
6 150	5.35 136	27.75 705	28 711	27.75 705	39.5 1005	24 600	1123/907 510/412
8 200	7 178	32.75 832	33.15 842	32.75 832	45 1145	-	2026/1586 920/760
10 250	8.74 222	39 991	39.41 1001	39 991	54 1370	-	4207/3610 1910/1640
12 300	10.35 263	44.5 1130	45.12 1146	44.5 1130	61 1650	-	6947/6068 3154/2755
14 350	11.38 289	49.5 1259	50.24 1276	49.5 1259	74.88 1900	-	9031/7048 4100/3200
16 400	13 330	54.5 1384	55.35 1406	54.5 1384	80.5 2050	-	13656/11674 6200/5300
18 450	14.61 371	60.5 1537	61.38 1559	60.5 1537	93.75 2350	-	19747/17775 8965/8070
20 500	16.38 416	65.5 1664	66.38 1686	65.5 1664	101.5 2580	-	28855/25969 13100/11790
24 600	19.61 498	76.5 1943	77.6 1971	76.5 1943	114.75 2915	-	34934/31443 15860/14275

The dimension and weights are for reference only and subject to change without notice.

1. For more dimensional information, please contact our sales representative.
2. “W” on above schematic is the diameter for hand wheel, the one without dimension on the table above is defaulted by gear operation.

OVERVIEW (Pressure Seal Bonnet)

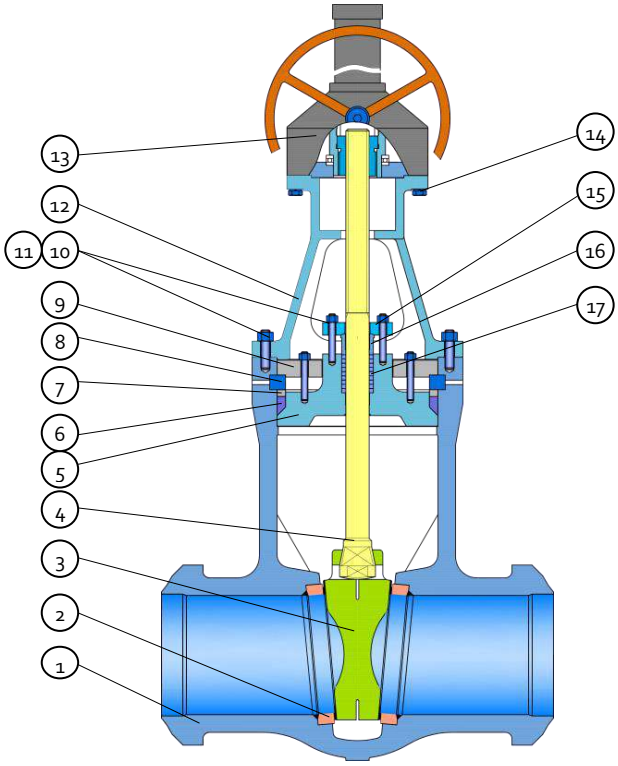

Part List

1 Body	5 Bonnet	9 Push Plate	13 Gear
2 Seat	6 Seal ring	10 Stud	14 Bolt
3 Wedge	7 Push ring	11 Nut	15 Gland flange
4 Stem	8 Split ring	12 Yoke	16 Gland

Standards

Design & Manufacture	ASME B16.34, MSS SP-144	
Face-to-face	ASME B16.10	
End Dimension	ASME B16.5(RF, RTJ) ASMEB16.47(RF,RTJ) ASME B16.25 (BW)	
Test & Inspection	API 598, ASME B16.34	
Typical Materials	Body, Bonnet,Disc	(Casting) A216 WCB, A351 CF3, CF8, CF3M, CF8M, A995 4A, 5A, A352 LCB, LCC, LC
		(Forging) A105, A350 LF2, LF3, LF5, A182 F304, F304L, F316, F316L, F51, F53, F5,F11,F22,F91, Monel, Inconel, Hastelloy
	Stem	A182 F6a, F304, F304L, F316, F316L, F51, F53,F55 Monel, Inconel, Hastelloy

DIMENSIONS AND WEIGHTS (Pressure Seal Bonnet) *ASME CLASS 900 (PN 150)*

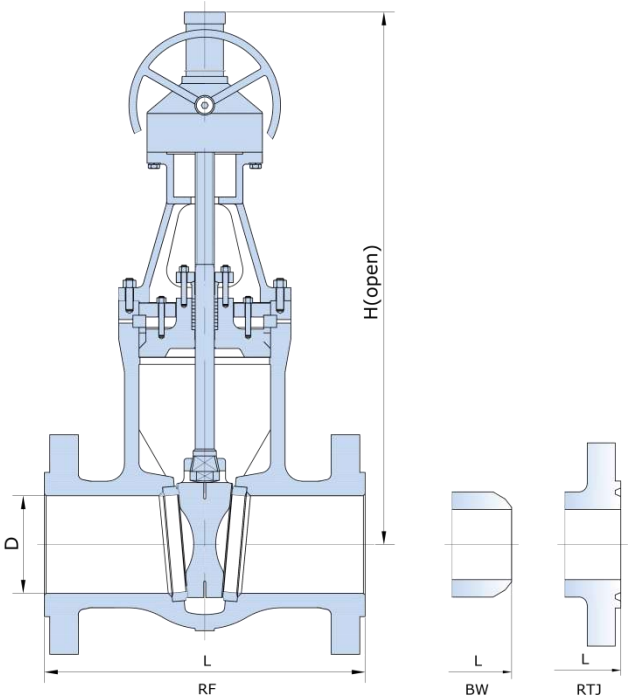

ASME CLASS 900 (PN 150)

Size *in/mm*	D	L			H	W	Weight
		RF	RTJ	BW			RF/BW *(lb/kg)*
2 50	1.87 47.5	14.5 368	14.63 371	8.5 216	19.62 498	7.87 200	163/119 74/54
2 ½ 65	2.24 57	16.5 419	16.62 422	10 254	21.5 547	9.84 250	222/172 101/78
3 80	2.87 73	15 381	15.13 384	12 305	22.5 573	11.81 300	289/231 131/105
4 100	3.86 98	18 457	18.13 460	14 356	26.62 678	17.72 450	379/297 172/135
5 125	4.76 121	22 559	22.13 562	17 432	35.5 900	19.7 500	615/463 276/210
6 150	5.75 146	24 610	24.13 613	20 508	38.2 970	19.7 500	378/573 335/260
8 200	7.48 190	29 737	29.13 740	26 660	43.5 1103	23.62 600	1410/1134 640/515
10 250	9.37 238	33 838	33.13 841	31 787	53 1345	-	2423/2026 1100/920
12 300	11.1 282	38 965	38.13 968	36 914	60 1525	-	3546/3040 1600/1380
14 350	12.24 311	40.5 1029	40.88 1038	39 991	74.5 1900	-	4956/4427 2250/2010
16 400	14 356	44.5 1130	44.88 1140	43 1092	81 2055	-	6278/5650 2850/2565
18 450	15.75 400	48 1219	48.5 1232	-	87 2215	-	6740/5474 3060/2485
20 500	17.52 445	52 1321	52.5 1334	-	101 2565	-	8447/7159 3835/3250
24 600	21 533	61 1549	61.75 1568	-	104 2640	-	10793/8954 4900/4065

The dimension and weights are for reference only and subject to change without notice.

1. For more dimensional information, please contact our sales representative.
2. “W” on above schematic is the diameter for hand wheel, the one without dimension on the table above is defaulted by gear operation.

DIMENSIONS AND WEIGHTS (Gate Valve - Pressure Seal Bonnet) *ASME CLASS 1500 (PN 250)*

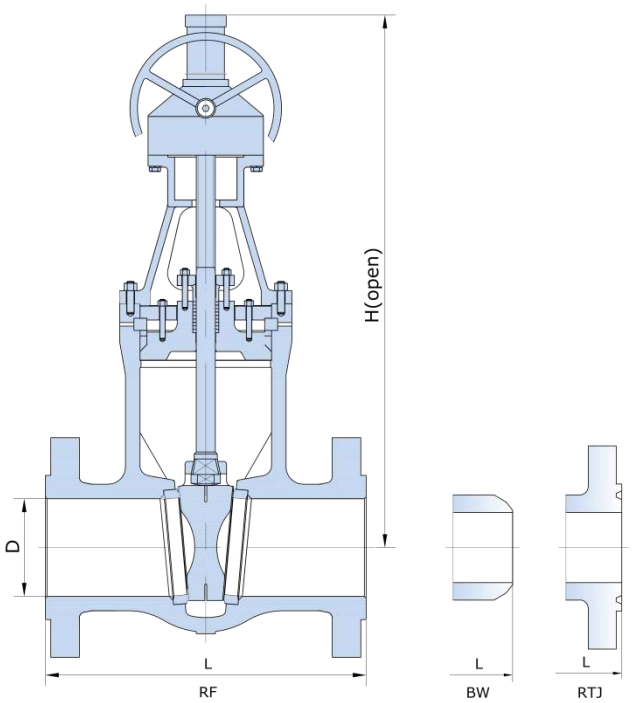

ASME CLASS 1500 (PN 250)

Size *in/mm*	D	L			H	W	Weight
		RF	RTJ	BW			RF/RTJ *(lb/kg)*
2 50	1.87 47.5	14.5 368	14.61 371	8.5 216	24.25 615	10 250	256/231 116/105
2 ½ 65	2.24 57	16.5 419	16.61 422	10 254	26 658	12 300	366/330 166/150
3 80	2.76 70	18.5 470	18.62 473	12 305	30 760	18 450	460/414 209/188
4 100	3.58 91	21.5 546	21.61 549	16 406	34.12 868	20 500	652/584 296/265
5 125	4.73 111	26.5 673	26.61 676	19 483	38.4 975	24 600	958/826 435/375
6 150	5.35 136	27.75 705	28 711	22 559	39.5 1005	24 600	1123/907 510/412
8 200	7 178	32.75 832	33.15 842	28 711	45 1145	-	2026/1586 920/760
10 250	8.74 222	39 991	39.41 1001	34 864	54 1370	-	4207/3610 1910/1640
12 300	10.35 263	44.5 1130	45.12 1146	39 991	61 1650	-	6947/6068 3154/2755
14 350	11.38 289	49.5 1259	50.24 1276	42 1067	74.88 1900	-	9031/7048 4100/3200
16 400	13 330	54.5 1384	55.35 1406	47 1194	80.5 2050	-	13656/11674 6200/5300
18 450	14.61 371	60.5 1537	61.38 1559	53 1346	93.75 2350	-	19747/17775 8965/8070
20 500	16.38 416	65.5 1664	66.38 1686	58 1473	101.5 2580	-	28855/25969 13100/11790
24 600	19.61 498	76.5 1943	77.6 1971	-	114.75 2915	-	34934/31443 15860/14275

The dimension and weights are for reference only and subject to change without notice.

1. For more dimensional information, please contact our sales representative.
2. “W” on above schematic is the diameter for hand wheel, the one without dimension on the table above is defaulted by gear operation.

DIMENSIONS AND WEIGHTS (Gate Valve - Pressure Seal Bonnet) *ASME CLASS 2500 (PN 420)*

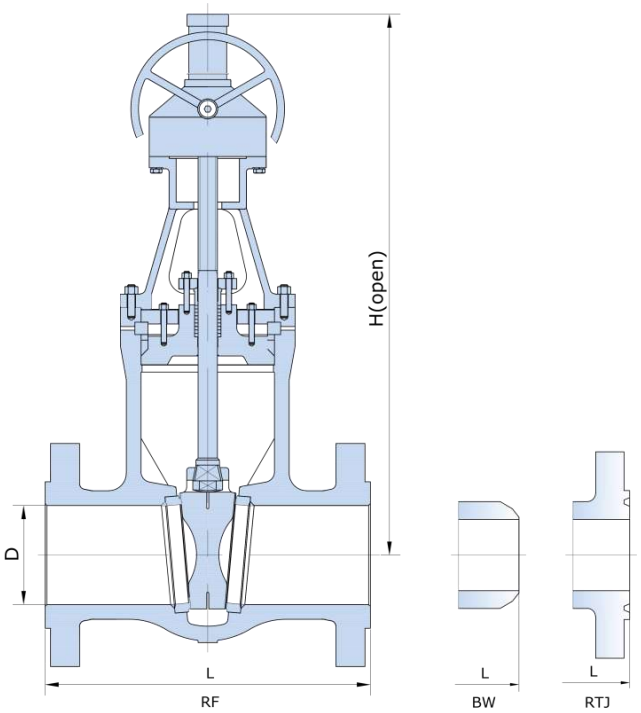

ASME CLASS 2500 (PN 420)

Size *in/mm*	D	L			H	W	Weight
		RF	RTJ	BW			RF/RTJ *(lb/kg)*
2 *50*	*1.5* *38*	17.75 *451*	17.88 *454*	*11* *279*	*23.38* *595*	*13.78* *350*	*253/143* *115/65*
2 ½ *65*	*1.89* *48*	20.32 *508*	20.56 *514*	*13* *330*	*25.6* *650*	*17.72* *450*	*300/172* *136/78*
3 *80*	*2.24* *57*	22.75 *578*	23 *584*	*14.5* *368*	*28* *710*	*17.72* *450*	*540/385* *245/175*
4 *100*	*2.87* *73*	26.5 *673*	26.88 *683*	*18* *457*	*32.25* *820*	*19.69* *500*	*1079/826* *490/375*
5 *125*	*3.62* *92*	31.26 *794*	31.77 *807*	*521* *33*	*43.3* *1100*	*23.62* *600*	*1476/974* *670/430*
6 *150*	*4.37* *111*	36 *914*	36.5 *927*	*24* *610*	*49.62* *1260*	*23.62* *600*	*1894/1278* *860/580*
8 *200*	*5.75* *146*	40.25 *1022*	40.88 *1038*	*30* *762*	*63.4* *1610*	-	*5396/4405* *2450/2010*
10 *250*	*7.27* *184*	50 *1270*	50.88 *1292*	*36* *914*	*81.7* *2076*	-	*10066/8370* *4570/3800*
12 *300*	*8.62* *219*	56 *1422*	56.88 *1444*	*41* *1041*	*89.8* *2281*	-	*13436/11454* *6100/5200*
14 350	*9.49* *241*	-	-	*44* *1118*	*74.88* *1900*	-	-
16 400	*10.87* *276*	-	-	*49* *1245*	*80.5* *2050*	-	-
18 450	*12.24* *311*	-	-	*55* *1397*	*93.75* *2350*	-	-

The dimension and weights are for reference only and subject to change without notice.

1. For more dimensional information, please contact our sales representative.
2. “W” on above schematic is the diameter for hand wheel, the one without dimension on the table above is defaulted by gear operation.

OVERVIEW (SPECIAL TYPE CAST STEEL GATE VALVE)

-

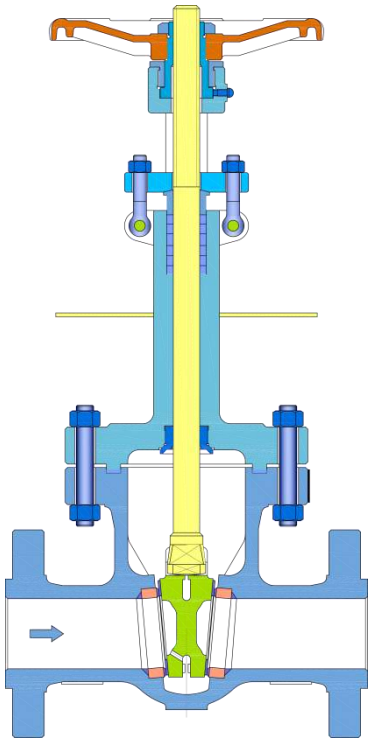	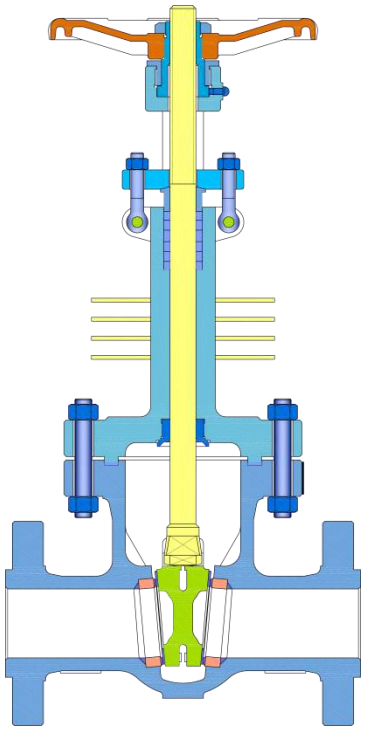	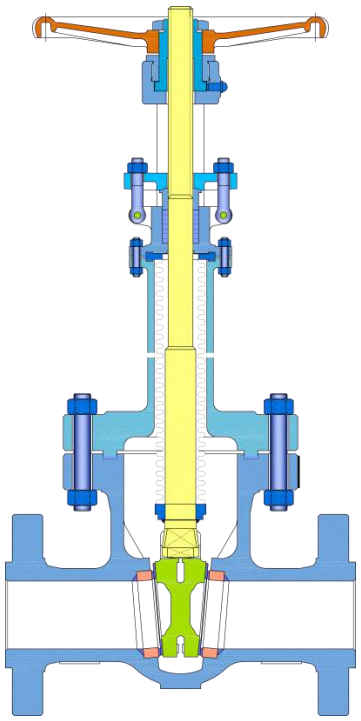
Low Temperature Extension	High Temperature Extension	Bellow Seal Extension
Structure characteristics: 1. The bonnet are extended for low temperature service, the packing position are raised to avoid the freeze of packing which will affect packing sealing performance; 2. The gate valve shall have relief hole on upstream direction while the pressure may remain in the cavity; 3. Low temperature cold isolation can be an option to prevent cold heat exchange	Structure characteristics: 1. The high temperature extended structure is mainly to prevent scald operator during operation. 2. The cooling fin can be selected to help heat radiation.	Structure characteristics: 1. Bellow seal extension has the bellow inside of the cavity, the effective compression of the bellows must be greater than the opening stroke of the valve; 2. Bellow seal structure can effectively reduce the leakage of valve stem, the primary seal is for bellows and secondary seal as a filler.;

VALVE FIGURE NUMBER — *HOW TO ORDER*

	Nominal Size	Valve Type	Pressure Rating	End Conn.	Construct-ion	Body Material	Trim Material	Seat	O-ring	Operation Mode
	A	B	C	D	E	F	G	H	I	J
e.g.	0 6	G A	6	R	1	C 4	0 5	R	0	H

NPS 6 Class 600,Gate Valve, Flexible wedge, bolt bonnet , Raised Face, WCB body, Trim 5#, Renewable Seat, No O-ring, HandwheelOperated.

A Nominal Size

00	Special	**02**	2 (DN 50)	**07**	8 RB	**19**	20 RB	**31**	32 RB
F1	3/8 (DN 10)	**R2**	2 RB	**08**	8 (DN 200)	**20**	20 (DN 500)	**32**	32 (DN 800)
F2	1/2 (DN 15)	**F6**	2 ½ (DN 65)	**09**	10 RB	**21**	22 RB	**33**	34 RB
0R	1/2 RB	**3R**	2 ½ RB	**10**	10 (DN 250)	**22**	22 (DN 550)	**34**	34 (DN 850)
F3	3/4 (DN 20)	**03**	3 (DN 80)	**11**	12 RB	**23**	24 RB	**35**	36 RB
R0	3/4 RB	**R3**	3 RB	**12**	12 (DN 300	**24**	24 (DN 600)	**36**	36 (DN 900)
01	1 (DN 25)	**04**	4 (DN 100)	**13**	14 RB	**25**	26 RB	**37**	38 RB
R1	1 RB	**R4**	4 RB	**14**	14 (DN 350)	**26**	26 (DN 650)	**38**	38 (DN 950)
F4	1 ¼ (DN 32)	**05**	5 (DN 125)	**15**	16 RB	**27**	28 RB	**39**	40 RB
1R	1 ¼ RB	**R5**	5 RB	**16**	16 (DN 400)	**28**	28 (DN 700)	**40**	40 (DN 1000)
F5	1 ½ (DN 40)	**06**	6 (DN 150)	**17**	18 RB	**29**	30 RB	**41**	42 RB
2R	1 ½ RB	**R6**	6 RB	**18**	18 (DN 450)	**30**	30 (DN 750)	**...**	More as such

B Valve Type

GA	Gate Valve
GL	Globe Valve
CH	Check Valve

C Pressure Rating

0	Special	**7**	Class 2500
1	Class 150	**9**	Class 900
3	Class 300	**8**	Class 800
5	Class 1500	**2**	Class 125(PN16)
6	Class 600	**4**	Class 400(PN64)

D End Connection

X	Special	**B**	Butt-Weld (BW)
R	RF Flanged	**S**	Socket-Weld (SW)
J	RTJ Flanged	**W**	Wafer
F	FF Flanged	**L**	Lug
T	Threaded		

E Construction

GA

1	Flexible wedge, Bolted Bonnet
2	Flexible wedge, Welded Bonnet
3	Flexible wedge, Pressure Seal
4	Flexible wedge, Bellow Seal
5	Solid wedge, Bolted Bonnet
6	Solid wedge, Welded Bonnet
7	Solid wedge, Pressure Seal
8	Solid wedge, Bellow Seal

F Body Material

X0	Special	**M9**	A182 F22 CL 3	**L5**	A350 LF3	**S6**	A351 CF8M
C1	A105	**M0**	A217 WC9	**L6**	A352 LC3	**S7**	A182 F316L
C2	A216 WCA	**E1**	A182 F5	**L7**	A350 LF5	**S8**	A351 CF3M
C4	A216 WCB	**E2**	A217 C5	**L8**	A352 LCB	**S9**	A182 F347
C6	A216 WCC	**E4**	A217 C6	**L9**	A350 LF6	**S0**	A351 C F8C
M1	A182 F1	**E5**	A182 F9	**LA**	A350 LF9	**D1**	A182 F51
M2	A217 WC1	**E6**	A217 C12	**LB**	A352 LC9	**D2**	A995 4A
M3	A182 F2	**E7**	A182 F91	**LD**	A352 LCC	**D3**	A182 F53
M4	A217 WC4	**E8**	A217 C12A	**S1**	A182 F304	**D4**	A995 5A
M5	A182 F12 CL 2	**L1**	A350 LF1	**S2**	A351 CF8	**D5**	A182 F55
M6	A217 WC5	**L2**	A352 LCA	**S3**	A182 F304L	**D6**	A995 6A
M7	A182 F11 CL 2	**L3**	A350 LF2	**S4**	A351 CF3		
M8	A217 WC6	**L4**	A352 LC2	**S5**	A182 F316		

G Trim Material

00	Special	**08**	13Cr/Stellite /13Cr	**16**	Stellite /Stellite /316	**25**	F53 /F53 /F53
01	13Cr/13Cr/13Cr	**09**	Monel/Monel /Monel	**17**	Stellite /Stellite /347	**32**	316L /Stellite /316L
02	304/304/304	**10**	316/316/316	**18**	Stellite /Stellite /Alloy 20	**33**	Stellite /Stellite /316L
03	310/310/310	**11**	Monel/Stellite/Monel	**20**	304L /304L /304L	**34**	304L /Stellite /304L
04	Hard 13Cr/Hard 13Cr/13Cr	**12**	316/Stellite/316	**21**	316L /316L /316L	**35**	Stellite /Stellite /304L
05	Stellite /Stellite /13Cr	**13**	Alloy 20/Alloy 20 /Alloy 20	**22**	321 /321 /321		
06	13Cr/Cu-Ni/13Cr	**14**	Alloy 20/Stellite /Alloy 20	**23**	F55 /F55/F55		
07	13Cr/Hard 13Cr /13Cr	**15**	Stellite /Stellite /304	**24**	F51/F51 /F51		

VALVE FIGURE NUMBER

HOW TO ORDER

	Nominal Size	Valve Type	Pressure Rating	End Conn.	Construct-ion	Body Material	Trim Material	Seat	O-ring	Operation Mode
	A	B	C	D	E	F	G	H	I	J
e.g.	0 6	G A	6	R	1	C 4	0 5	R	0	H

NPS 6 Class 600,Gate Valve, Flexible wedge, bolt bonnet , Raised Face, WCB body, Trim 5#, Renewable Seat, No O-ring, HandwheelOperated.

H Seat

- **H** HNBR
- **E** EPDM
- **V** VITON
- **B** BUNA
- **R** Renewable Metal
- N Non Renewable Metal

I O-Ring

- **0** None
- **1** Viton
- **2** Teflon
- **3** HNBR
- **4** NBR
- **5** Special
- **6** EPDM
- **7** FVMQ
- **8** FFKM
- **9** AFLAS

J Operation

- **B** Bare Stem
- **L** Lever
- **G** Gearbox
- **P** Pneumatic
- **E** Electric
- **C** Gear w/ Chain
- N Pneumatic-Hydraulic
- **S** Solid Lever
- **D** Lever with locking device
- **R** Solid lever with locking device

HOW THE FIGURE NUMBER SYSTEM WORKS

Introduction. Figure number system uses a code consisting 14 digits of letters and numbers to represent the specification of a valve of certain specification. Of 14 digits, they are separated into 10 groups identified by letters from A to J. Each group represents a parameter of a valve, together they contain almost all the essential parameters of the valve.

Uses. To use the figure number system to generate a code is easy. Under each group, the code is shown on the left while on the right is the meaning of the code. Start by selecting a code from group A, through group J. If the specification of the valve is not listed, select the code for "Special ". The total length of the figure number shall be exactly 14 digits.

Cautions. It is advised that you have as detailed the specification as possible to generate a figure number, which means eliminating "Specials". If you don't have enough specification or information about the valve you are ordering, or you're not sure how to use the system to generate a figure number, contact one of our sales representatives for help.

Note: ERREESSE reserves the right to make any modifications without notice.

Offshore

Pipeline

ERREESSE

Onshore

Refinery

IMPORTANT NOTICE

- All dimensions in inches not listed in standards are converted from millimeters. Weights in lbs (pounds) are converted from kilograms.
- Data listed in the catalog, including dimensions, weights, specifications and other valve related data are intended to provide general information and guidance only.

ERREESSE Valve GmbH

Berlin Kreuz Berg District ÿ Germany T +49 303 1879831 www.erreesse.de

F +49 303 1879834 E info@erreesse.de