ERREESSE Valve GmbH

GLOBE VALVE

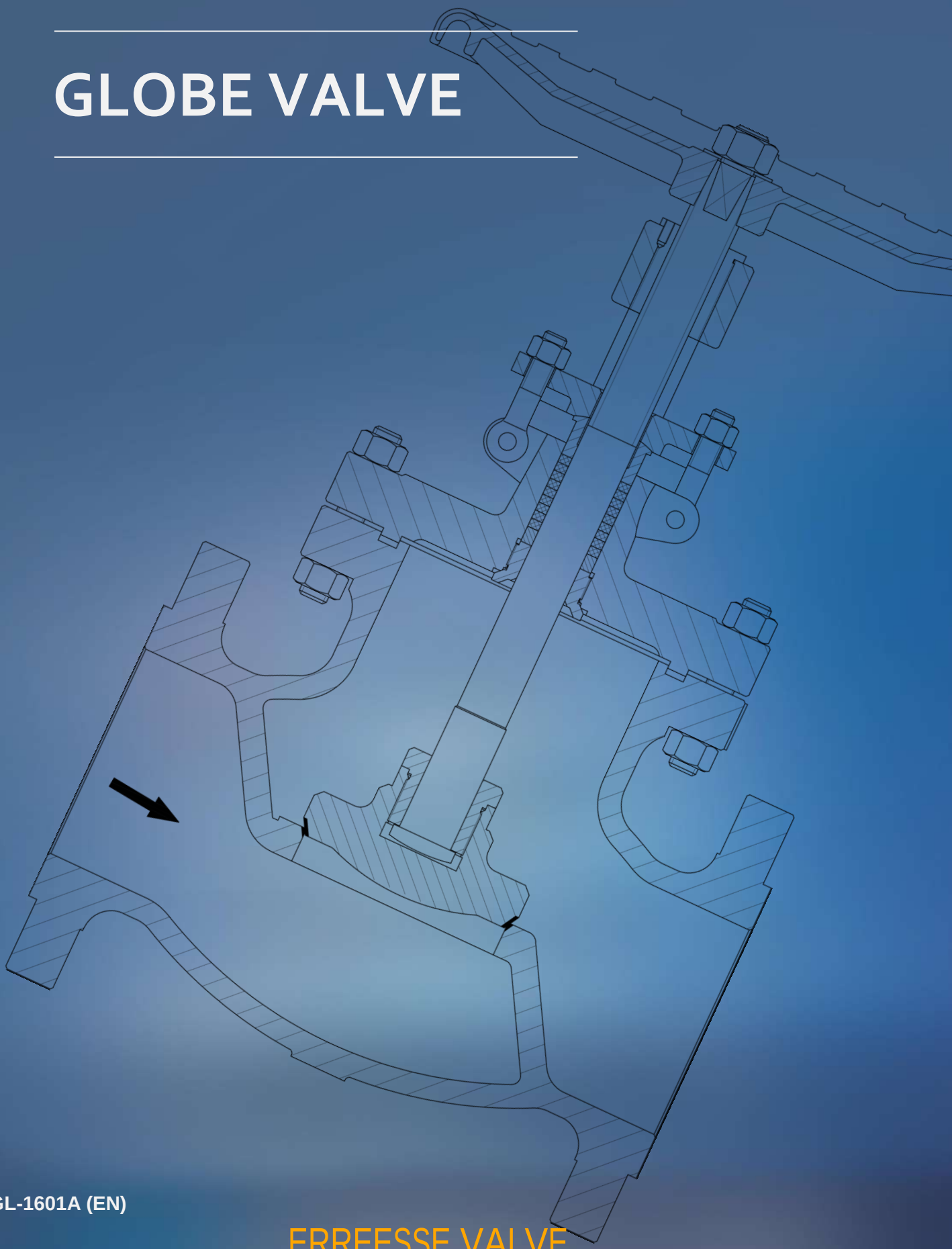

GL-1601A (EN)

ERREESSE VALVE

TABLE OF INDEX | *PAGE*

Introduction, *Features*	*3*
Scope of Products	*4*
Overview Globe Valve (Bolt Bonnet)	*5*
Dimensions and Weights	6
Class 150 (PN 20)	*6*
Class 300(PN 50)	*7*
Class 600(PN 100)	*8*
Class 900(PN 150)	*9*
Class 1500(PN 250)	*10*
Overview Globe Valve (Pressure Seal Bonnet)	*11*
Dimensions and Weights	*12*
Class 900 (PN 150)	*12*
Class 1500 (PN 150)	*13*
Class 2500 (PN 250)	*14*
Valve Figure Number, *How To Order*	*15-17*

This page is intentionally left blank.

INTRODUCTION

INTRODUCTION

ERREESSEcast globe valve offers T type body by default with rising stem and hand wheel. It blocks the flow of pipeline through the rotation and lifting of hand wheel as well as stem to drive the lift of disc. The globe valve has the feature of long service lift since there is no relative friction between disc and body sealing surface;

Bolted bonnet, pressure bonnet, bellow seal bonnet, high/low temperature extended bonnet and ISO 15848 fugitive emission designed valves are available upon different request of services;

Design of Disc

Single disc is normally adopted on cast globe valve, the medium flows from the bottom to the top; double disc is just applied while larger pressure difference or bigger size of valve, the medium flows from top to the bottom;

Plug type disc can be provided upon request.

Design of Seat

ERREESSE cast globe valve is defaulted by non -renewable body seat, renewable seat is provided upon request only.

FEATURES

Design of Body -Bonnet Connection

Bolted bonnet is normally applied on CL150~CL900, body seal is defaulted by gasket and RTJ ring; Pressure seal bonnet is applied on CL1500~CL2500 with pressure seal ring for body seal;

Design of Packing

By default graphite packing is used, PTFE packing can be used on corrosive media. API 622 fugitive emission packing will be used upon request;

Design of Backseat

Renewable back seat is applied on all carbon steel and low alloy steel valve, however, body back seat is applied for stainless steel valve;

Design of Actuation

Hand wheel and gear box are normally designed for cast globe valve based on different size and pressure rating; Electric, pneumatic or Chain wheel operation can be provided upon request.

SCOPE OF PRODUCTS

Gate Valve

Legends: **A** –Available in Bolt Bonnet
B–Available in Pressure Seal Bonnet
C–Not Usually Required

Size in/mm	Class 150 PN 20	Class 300 PN 50	Class 600 PN 100	Class 900 PN 150	Class 1500 PN 250	Class 2500 PN 420
2 *50*	A	A	A	A, B	A, B	A, B
3 *65*	A	A	A	A, B	A, B	A, B
4 *80*	A	A	A	A, B	A, B	A, B
5 *100*	A, C	A, C	A, C	A, B,C	A, B,C	A, B,C
6 *150*	A	A	A	A, B	A, B	A, B
8 *200*	A	A	A	A, B	A, B	A, B
10 *250*	A	A	A	A, B	A, B	A, B
12 *300*	A	A	A	A, B	A, B	A, B
14 *350*	A	A	A	A, B	A, B	
16 *400*	A	A	A	A, B	A, B	
18 *450*	A	A	A	A, B		
20 *500*	A	A	A	A, B		
22 *550*	A	A				
24 *600*	A	A				

1. The sizes listed above are normal diameters. Contact our sales representative if any other dimensions are requested.

OVERVIEW (Bolt Bonnet)

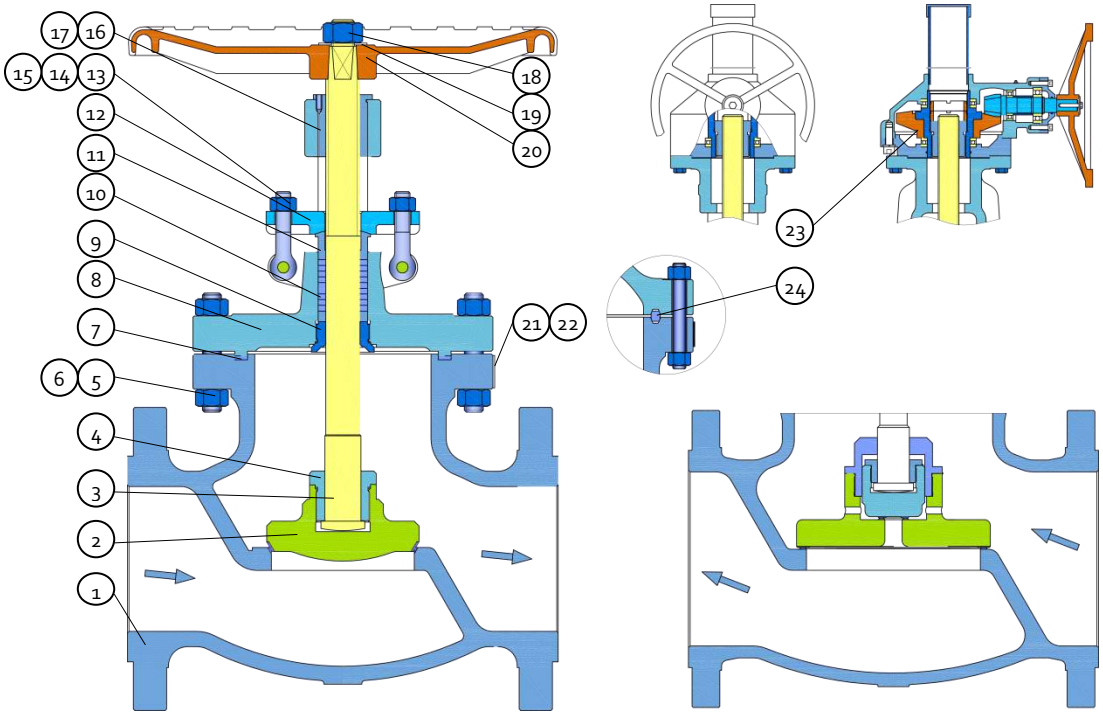

Single disc Type

Double disc Type

Part List

1	Body	7	Gasket	13	Eye Bolt	19	Washer
2	Disc	8	Bonnet	14	Nut	20	Handwheel
3	Stem	9	Backseat	15	Pin	21	Rivet
4	Sleeve	10	Packing	16	Stem Nut	22	Nameplate
5	Stud	11	Gland	17	Handwheel Nut	23	Gear
66		12	Gland Flange	18	Nut	24	Octagonal Ring

Standards

Design & Manufacture	BS 1873, API 623, ASME B16.34	
Face-to-face	ASME B16.10	
End Dimension	ASME B16.5 (RF, RTJ), ASME B16.47(RF,RTJ) ASME B16.25 (BW)	
Test & Inspection	API 598	
Typical Materials	Body, Bonnet, Disc	(Casting): A216 WCB, A351 CF3, CF8, CF3M, CF8M, A995 4A, 5A, A352 LCB, LCC, LC2
		(Forging): A105, A350 LF2, LF3, LF5, A182 F304, F304L, F316, F316L, F51, F53, F5,F11,F22,F91, Monel, Inconel, Hastelloy
	Stem	A182 F6a, F304, F304L, F316, F316L, F51, F53,F55 Monel, Inconel, Hastelloy

DIMENSIONS AND WEIGHTS (Bolt Bonnet) *ASME CLASS 150 (PN 20)*

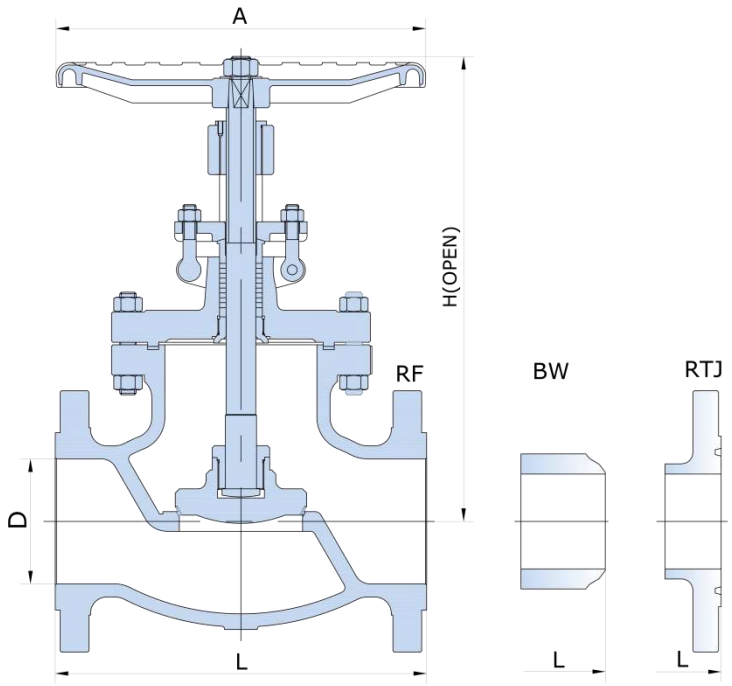

ASME CLASS 150 (PN 20)

Size *in/mm*	D	L			H	W	Weight
		RF	RTJ	BW			RF/BW *(lb/kg)*
2 *50*	2 *51*	*8* *203*	*8.5* *216*	*8* *203*	*14.3* *363*	*7.87* *200*	*37/34* *17/15.5*
2 ½ *65*	2.5 *64*	*8.5* *216*	*9* *229*	*8.5* *216*	*15.55* *395*	*9.84* *250*	*53/48* *24/22*
3 *80*	3 *76*	*9.5* *241*	*10* *254*	*9.5* *241*	*16.65* *423*	*9.84* *250*	*75/68* *34/31*
4 *100*	4 *100*	*11.5* *292*	*12* *305*	*11.5* *292*	*19* *483*	*11.81* *300*	*104/95* *47/43*
5 *125*	5 *125*	*14* *356*	*14.53* *369*	*14* *356*	*20.67* *525*	*15.75* *400*	*154/141* *70/64*
6 *150*	6 *150*	*16* *406*	*16.5* *419*	*16* *406*	*22.52* *572*	*15.75* *400*	*187/172* *85/78*
8 *200*	8 *203*	*19.5* *495*	*20* *508*	*19.5* *495*	*26.65* *677*	*17.72* *450*	*275/220* *125/110*
10 *250*	10 *250*	*24.5* *622*	*25* *635*	*24.5* *622*	*32.87* *835*	*19.69* *500*	*557/524* *253/238*
12 *300*	12 *305*	*27.5* *698*	*28* *711*	*27.5* *698*	*39.17* *995*	*23.62* *600*	*802/753* *364/342*
14 *350*	14 *337*	*31* *787*	*31.5* *800*	*31* *787*	*40.16* *1020*	-	*1123/1048* *510/476*
16 *400*	*15.24* *387*	*36* *914*	*36.5* *927*	*36* *914*	*41.34* *1050*	-	*1630/1487* *740/675*
18 *450*	*17.24* *438*	*38.5* *978*	*39* *991*	*38.5* *978*	*50.6* *1285*	-	*1773/1652* *805/750*
20 *500*	*19.25* *489*	*38.5* *978*	*39* *991*	*38.5* *978*	*58.27* *1480*	-	*1872/1729* *850/785*
24 *600*	*23.27* *591*	*51* *1295*	*51.5* *1308*	*51* *1295*	*68.11* *1730*	-	*2709/2434* *1230/1105*

The dimension and weights are for reference only and subject to change without notice.

1. For more dimensional information, please contact our sales representative.
2. “W” on above schematic is the diameter for hand wheel, the one without dimension on the table above is defaulted by gear operation.

DIMENSIONS AND WEIGHTS (Bolt Bonnet) *ASME CLASS 300 (PN 50)*

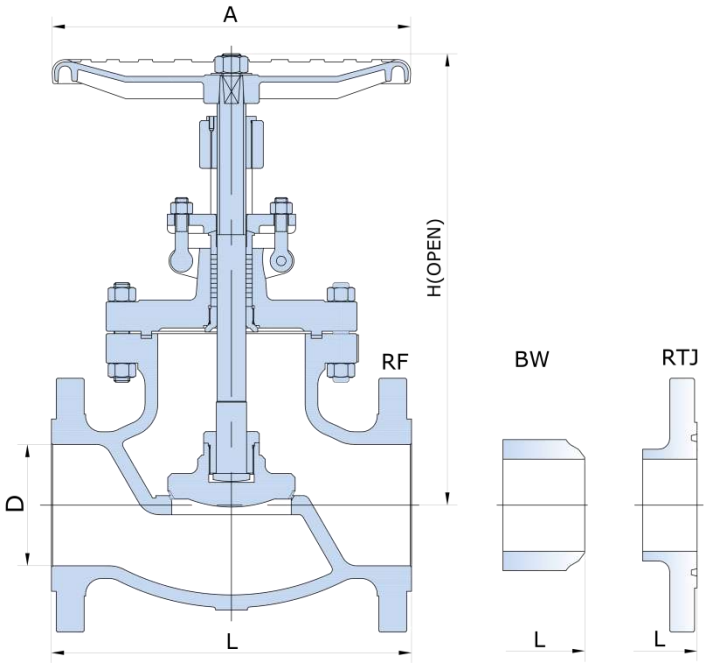

ASME CLASS 300 (PN 50)

Size *in/mm*	D	L			H	W	Weight
		RF	RTJ	BW			RF/BW *(lb/kg)*
2 *50*	2 *51*	*10.5* *267*	*11.14* *283*	*10.5* *267*	*14.72* *374*	*7.87* *200*	*64/57* *29/26*
2 ½ *65*	2.5 *64*	*11.5* *292*	*12.13* *308*	*11.5* *292*	*15.55* *395*	*9.84* *250*	*84/68* *35/31*
3 *80*	3 *76*	*12.5* *318*	*13.15* *334*	*12.5* *318*	*17.76* *451*	*11.81* *300*	*104/90* *47/41*
4 *100*	4 *100*	*14* *356*	*14.65* *372*	*14* *356*	*20.16* *512*	*13.78* *350*	*123/112* *56/51*
5 *125*	5 *125*	*15.75* *400*	*16.38* *416*	*15.75* *400*	*21.26* *540*	*13.78* *350*	*148/130* *67/59*
6 *150*	6 *150*	*17.5* *444*	*18.11* *460*	*17.5* *444*	*25* *635*	*17.72* *450*	*278/253* *126/115*
8 *200*	8 *203*	*22* *559*	*22.64* *575*	*22* *559*	*26.85* *682*	*19.7* *500*	*529/474* *240/215*
10 *250*	10 *250*	*24.5* *622*	*25.12* *638*	*24.5* *622*	*32.87* *835*	*19.7* *500*	*1233/1167* *560/530*
12 *300*	12 *305*	*28* *711*	*28.62* *727*	*28* *711*	*33.66* *855*	*19.7* *500*	*1586/1482* *720/673*
14 *350*	14 *337*	*33* *838*	*33.62* *854*	*33* *838*	*37.4* *950*	-	-
16 *400*	*15.24* *387*	*34* *864*	*34.65* *880*	*34* *864*	*43.3* *1100*	-	-
18 *450*	*17* *432*	*38.5* *978*	*39.13* *994*	*38.5* *978*	*45.28* *1150*	-	-
20 *500*	*19* *483*	*40* *1016*	*40.75* *1035*	*40* *1016*	*47.24* *1200*	-	-
24 *600*	*23* *584*	*53* *1346*	*53.86* *1368*	*53* *1346*	*51.18* *1300*	-	-

The dimension and weights are for reference only and subject to change without notice.

1. For more dimensional information, please contact our sales representative.
2. “W” on above schematic is the diameter for hand wheel, the one without dimension on the table above is defaulted by gear operation.

DIMENSIONS AND WEIGHTS (Bolt Bonnet) *ASME CLASS 600 (PN 100)*

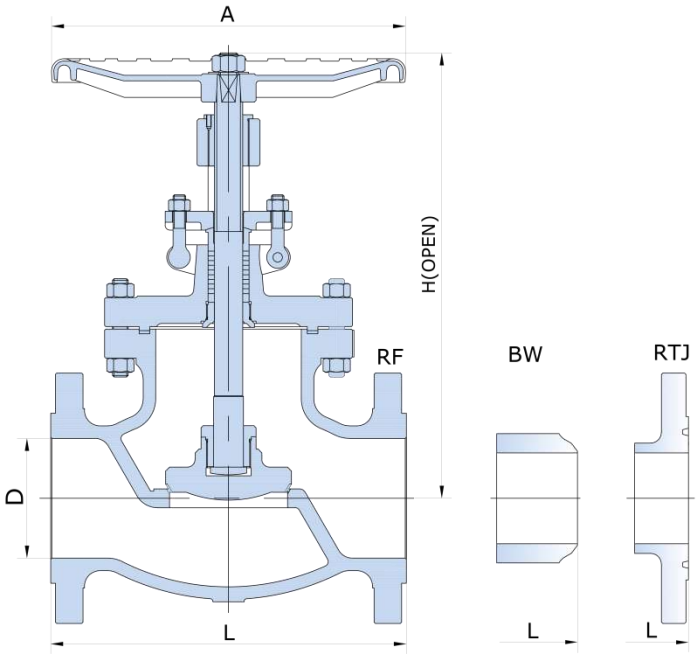

ASME CLASS 600 (PN 100)

Size *in/mm*	D	L			H	W	Weight
		RF	RTJ	BW			RF/BW *(lb/kg)*
2 *50*	2 *51*	11.5 *292*	11.63 *295*	11.5 *292*	*15.16* *385*	*441* *200*	*75/66* *34/30*
2 ½ *65*	2.5 *64*	13 *330*	13.13 *333*	13 *330*	*16.93* *430*	*551* *250*	*99/88* *50/45*
3 *80*	3 *76*	14 *356*	14.13 *359*	14 *356*	*18.7* *475*	*617* *280*	*152/137* *69/62*
4 *100*	4 *100*	17 *432*	17.13 *435*	17 *432*	*26.97* *685*	*661* *300*	*286/267* *130/121*
5 *125*	5 *125*	20 *508*	2012 *511*	20 *508*	*30.31* *770*	*881* *400*	*419/385* *190/175*
6 *150*	6 *150*	22 *559*	22.13 *562*	22 *559*	*35.43* *900*	*991* *450*	*551/518* *250/235*
8 *200*	*7.87* *200*	26 *660*	26.13 *663*	26 *660*	*35.94* *913*	*1100* *500*	*1002/947* *455/430*
10 *250*	9.76 248	31 *787*	31.13 *790*	31 *787*	*41.73* *1060*	*23.62* *600*	*1806/1692* *820/768*
12 *300*	*11.73* *298*	33 *838*	33.13 *841*	33 *635*	*48.23* *1225*		
14 *350*	*12.87* *327*	35 *889*	35.12 *891*	35 *889*	*52.28* *1328*	-	
16 *400*	*14.76* *375*	39 *991*	39.13 *994*	39 *991*	*61* *1550*	-	
18 *450*	*16.5* *419*	43 *1092*	43.13 *1095*	430 *1092*	*66.93* *1700*	-	
20 *500*	*18.27* *464*	47 *1194*	47.25 *1200*	47 *1194*	*70.87* *1800*	-	

The dimension and weights are for reference only and subject to change without notice.

1. For more dimensional information, please contact our sales representative.
2. “W” on above schematic is the diameter for hand wheel, the one without dimension on the table above is defaulted by gear operation.

DIMENSIONS AND WEIGHTS (Bolt Bonnet) *ASME CLASS 900 (PN 150)*

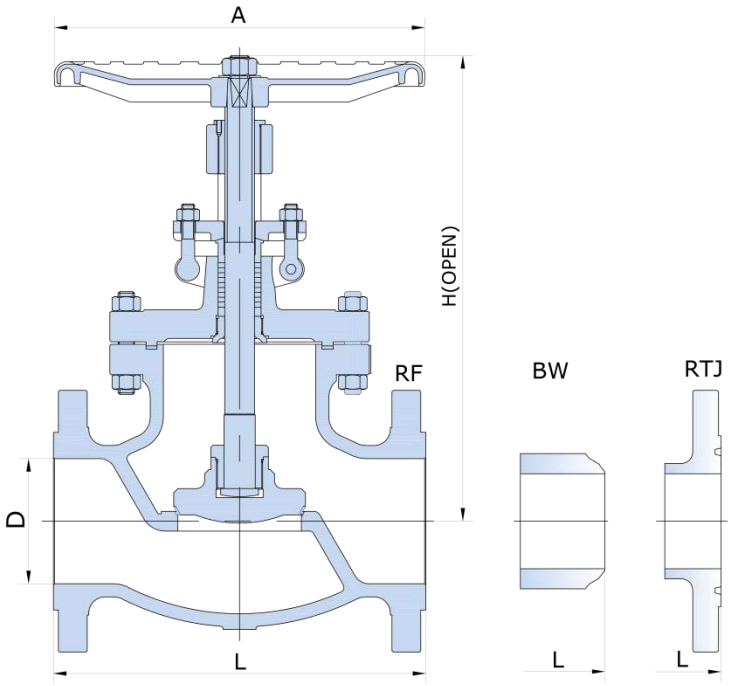

ASME CLASS 900 (PN 150)

Size *in/mm*	D	L			H	W	Weight
		RF	RTJ	BW			RF/BW *(lb/kg)*
2 *50*	*1.87* *47.5*	14.5 *368*	14.63 *371*	14.5 *368*	17.5 445	9.84 250	152/143 69/65
2 ½ *65*	*2.24* *57*	16.5 *419*	16.62 *422*	16.5 *419*	19.5 502	11.81 300	231/216 105/98
3 *80*	*2.87* *73*	15 *381*	15.13 *384*	15 *381*	21 533	13.78 350	238/220 108/100
4 *100*	*3.86* *98*	18 *457*	18.13 *460*	18 *457*	24.5 622	15.75 400	352/319 160/145
5 *125*	*4.76* *121*	22 *559*	22.13 *562*	22 *559*	27.16 690	17.72 450	617/562 280/255
6 *150*	*5.75* *146*	24 *610*	24.13 *613*	24 *610*	29.5 750	19.7 500	771/711 350/323
8 *200*	*7.48* *190*	29 *737*	29.13 *740*	29 *737*	36.5 927	19.7 500	1564/1487 710/675
10 *250*	9.37 238	33 *838*	33.13 *841*	33 *838*	44.88 1140	-	
12 *300*	*11.1* *282*	38 *965*	38.13 *968*	38 *965*	53.12 1350	-	
14 *350*	*12.24* *311*	40.5 *1029*	40.88 *1039*	40.5 *1029*	55.12 1400	-	
16 *400*	*14* *356*	44.5 *1130*	44.88 *1140*	44.5 *1130*	63 1600	-	
18 *450*	*15.75* *400*	48 *1219*	48.5 *1232*	48 *1219*	68.9 1750	-	
20 *500*	*17.52* *445*	52 *1321*	52.5 *1334*	52 *1321*	72.83 1850	-	

The dimension and weights are for reference only and subject to change without notice.

1. For more dimensional information, please contact our sales representative.
2. “W” on above schematic is the diameter for hand wheel, the one without dimension on the table above is defaulted by gear operation.

DIMENSIONS AND WEIGHTS (Bolt Bonnet) *ASME CLASS 1500 (PN 250)*

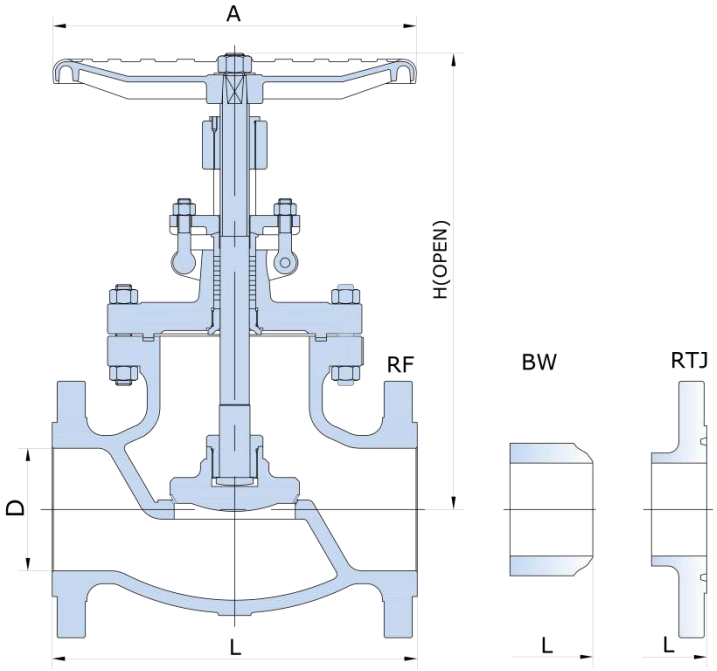

ASME CLASS 1500 (PN 250)

Size *in/mm*	D	L			H	W	Weight
		RF	RTJ	BW			RF/BW *(lb/kg)*
2 *50*	*1.87* *47.5*	14.5 *368*	*14.61* *371*	14.5 *368*	16.93 430	11.81 300	161/150 73/68
2 ½ *65*	*2.24* *57*	16.5 *419*	*16.61* *422*	16.5 *419*	19.69 500	13.78 350	253/231 115/105
3 *80*	*2.76* *70*	18.5 *470*	*18.62* *473*	18.5 *470*	29.53 750	15.75 400	324/291 147/132
4 *100*	*3.58* *91*	21.5 *546*	*21.61* *549*	21.5 *546*	32.28 820	17.72 450	436/319 198/182
5 *125*	*4.73* *111*	26.5 *673*	*26.61* *676*	26.5 *673*	34.65 880	19.7 500	771/731 350/332
6 *150*	*5.35* *136*	27.75 *705*	*28* *711*	27.75 *705*	35.83 910	23.6 600	1123/1068 510/485
8 *200*	*7* *178*	32.75 *832*	*33.15* *842*	32.75 *832*	39.96 1015	-	-
10 *250*	8.74 222	39 *991*	*39.41* *1001*	39 *991*	40.75 1035	-	-
12 *300*	*10.35* *263*	44.5 *1130*	*45.12* *1146*	44.5 *1130*	53.15 1350	-	-
14 *350*	*11.38* *289*	49.5 *1259*	*50.24* *1276*	49.5 *1259*	57.48 1460	-	-
16 *400*	*13* *330*	54.5 *1384*	*55.35* *1406*	54.5 *1384*	61 1550	-	-
18 *450*	*14.61* *371*	60.5 *1537*	*61.38* *1559*	60.5 *1537*	64.57 1640	-	-
20 *500*	*16.38* *416*	65.5 *1664*	*66.38* *1686*	65.5 *1664*	66.93 1700	-	-

The dimension and weights are for reference only and subject to change without notice.

1. For more dimensional information, please contact our sales representative.
2. “W” on above schematic is the diameter for hand wheel, the one without dimension on the table above is defaulted by gear operation.

OVERVIEW (Pressure Seal Bonnet)

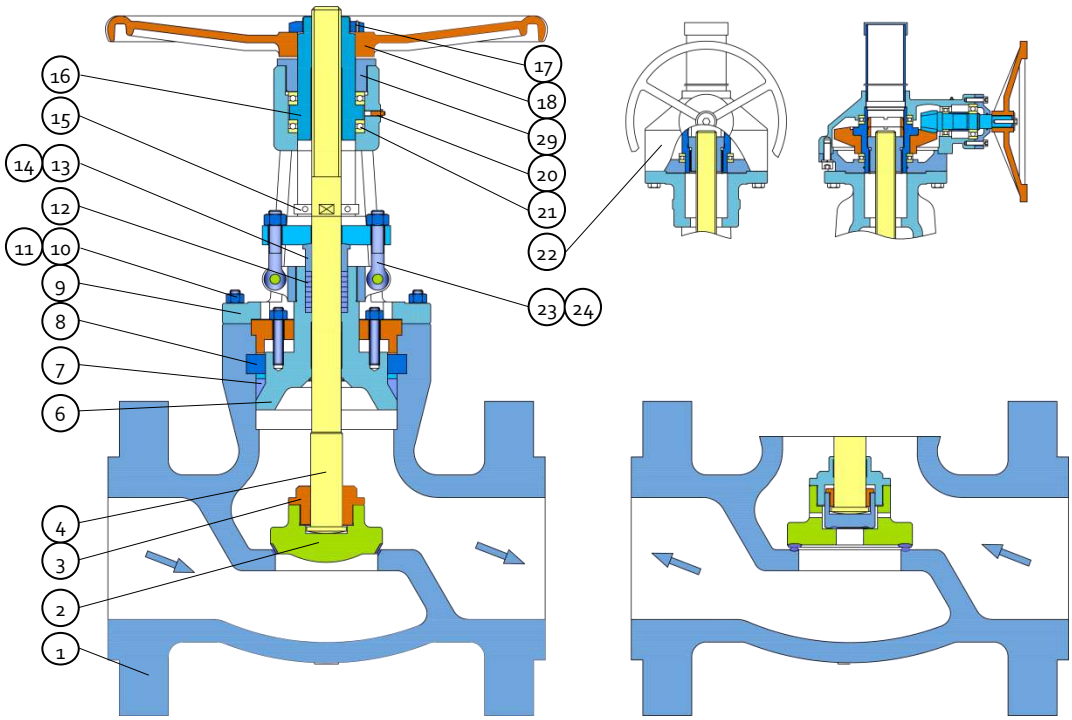

Single Disc Type

Double Disc Type

Part List

1 Body
2 Disc
3 Disc Nut
4 Stem
5 Bonnet
6 Seal ring
7 Split ring
8 Split ring
9 Yoke
10 Stud
11 Nut
12 Packing
13 Gland
14 Gland flange
15 Fixture Block
16 StemNut
17 Handwheel Nut
18 Handwheel
19 Bear Gland
20 Grease NippleNutNut
21 Bear
22 Gear
23 Eyes Bolt
24 Nut

Standards

Design & Manufacture	ASME B16.34, MSS SP-144	
Face-to-face	ASME B16.10	
End Dimension	ASME B16.5(RF, RTJ) ASMEB16.47(RF,RTJ) ASME B16.25 (BW)	
Test & Inspection	API 598, ASME B16.34	
TypicalMaterials	Body, Bonnet,Disc	(Casting) A216 WCB, A351 CF3, CF8, CF3M, CF8M, A995 4A, 5A, A352 LCB, LCC, LC
		(Forging) A105, A350 LF2, LF3, LF5, A182 F304, F304L, F316, F316L, F51, F53, F5,F11,F22,F91, Monel, Inconel, Hastelloy
	Stem	A182 F6a, F304, F304L, F316, F316L, F51, F53,F55, Monel, Inconel, Hastelloy

DIMENSIONS AND WEIGHTS (Pressure Seal Bonnet) *ASME CLASS 900 (PN 150)*

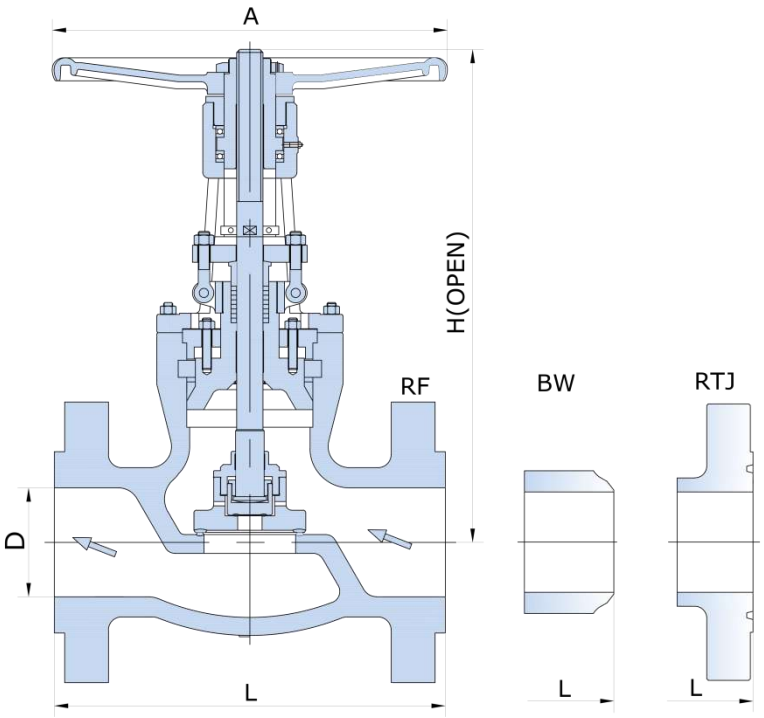

ASME CLASS 900 (PN 150)

Size *in/mm*	D	L			H	W	Weight
		RF	RTJ	BW			RF/BW *(lb/kg)*
2 *50*	*1.87* *47.5*	14.5 *368*	14.63 *371*	*8.5* *216*	17.5 445	9.84 250	152/143 69/65
2 ½ *65*	*2.24* *57*	16.5 *419*	16.62 *422*	*10* *254*	19.5 502	11.81 300	231/216 105/98
3 *80*	*2.87* *73*	15 *381*	15.13 *384*	*12* *305*	21 533	13.78 350	238/220 108/100
4 *100*	*3.86* *98*	18 *457*	18.13 *460*	*14* *356*	24.5 622	15.75 400	352/319 160/145
5 *125*	*4.76* *121*	22 *559*	22.13 *562*	*17* *432*	27.16 690	17.72 450	617/562 280/255
6 *150*	*5.75* *146*	24 *610*	24.13 *613*	*20* *508*	29.5 750	19.7 500	771/711 350/323
8 *200*	*7.48* *190*	29 *737*	29.13 *740*	*26* *660*	36.5 927	19.7 500	1564/1487 710/675
10 *250*	*9.37* *238*	33 *838*	33.13 *841*	*31* *787*	44.88 1140	-	
12 *300*	*11.1* *282*	38 *965*	38.13 *968*	*36* *914*	53.12 1350	-	
14 *350*	*12.24* *311*	40.5 *1029*	40.88 *1038*	*39* *991*	55.12 1400	-	
16 *400*	*14* *356*	44.5 *1130*	44.88 *1140*	*43* *1092*	63 1600	-	
18 *450*	*15.75* *400*	48 *1219*	48.5 *1232*	-	68.9 1750	-	
20 *500*	*17.52* *445*	52 *1321*	52.5 *1334*	-	72.83 1850	-	

The dimension and weights are for reference only and subject to change without notice.

1. For more dimensional information, please contact our sales representative.
2. “W” on above schematic is the diameter for hand wheel, the one without dimension on the table above is defaulted by gear operation.

DIMENSIONS AND WEIGHTS (Gate Valve - Pressure Seal Bonnet) *ASME CLASS 1500 (PN 250)*

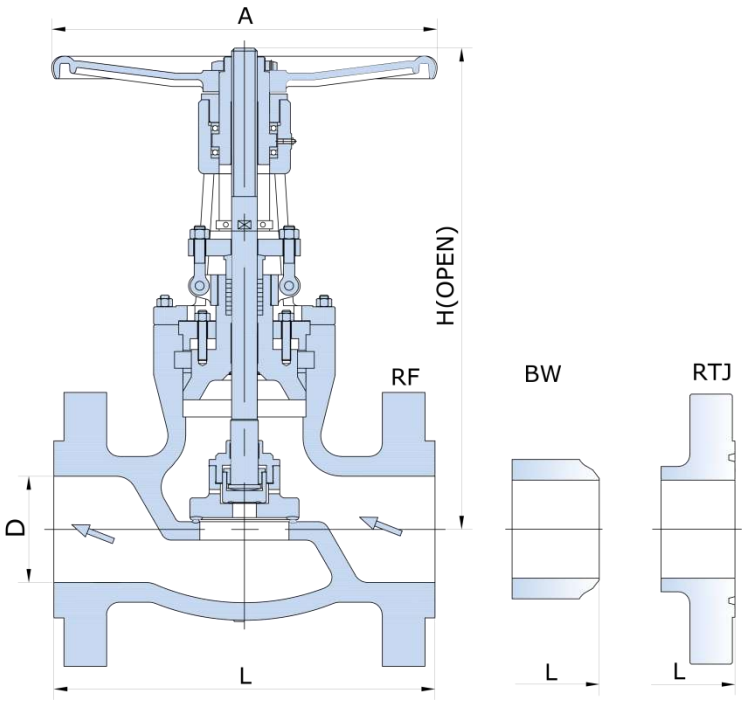

ASME CLASS 1500 (PN 250)

Size *in/mm*	D	L			H	W	Weight
		RF	RTJ	BW			RF/RTJ *(lb/kg)*
2 *50*	*1.87* *47.5*	14.5 *368*	*14.61* *371*	*8.5* *216*	16.93 430	11.81 300	161/150 73/68
2 ½ *65*	*2.24* *57*	16.5 *419*	*16.61* *422*	*10* *254*	19.69 500	13.78 350	253/231 115/105
3 *80*	*2.76* *70*	18.5 *470*	*18.62* *473*	*12* *305*	29.53 750	15.75 400	324/291 147/132
4 *100*	*3.58* *91*	21.5 *546*	*21.61* *549*	*16* *406*	32.28 820	17.72 450	436/319 198/182
5 *125*	*4.73* *111*	26.5 *673*	*26.61* *676*	*19* *483*	34.65 880	19.7 500	771/731 350/332
6 *150*	*5.35* *136*	27.75 *705*	*28* *711*	*22* *559*	35.83 910	23.6 600	1123/1068 510/485
8 *200*	*7* *178*	32.75 *832*	*33.15* *842*	*28* *711*	39.96 1015	-	-
10 *250*	8.74 *222*	39 *991*	*39.41* *1001*	*34* *864*	40.75 1035	-	-
12 *300*	*10.35* *263*	44.5 *1130*	*45.12* *1146*	*39* *991*	53.15 1350	-	-
14 *350*	*11.38* *289*	49.5 *1259*	*50.24* *1276*	*42* *1067*	57.48 1460	-	-
16 *400*	*13* *330*	54.5 *1384*	*55.35* *1406*	*47* *1194*	61 1550	-	-
18 *450*	*14.61* *371*	60.5 *1537*	*61.38* *1559*	*53* *1346*	64.57 1640	-	-
20 *500*	*16.38* *416*	65.5 *1664*	*66.38* *1686*	*58* *1473*	66.93 1700	-	-

The dimension and weights are for reference only and subject to change without notice.

1. For more dimensional information, please contact our sales representative.
2. “W” on above schematic is the diameter for hand wheel, the one without dimension on the table above is defaulted by gear operation.

DIMENSIONS AND WEIGHTS (Gate Valve - Pressure Seal Bonnet) *ASME CLASS 2500 (PN 420)*

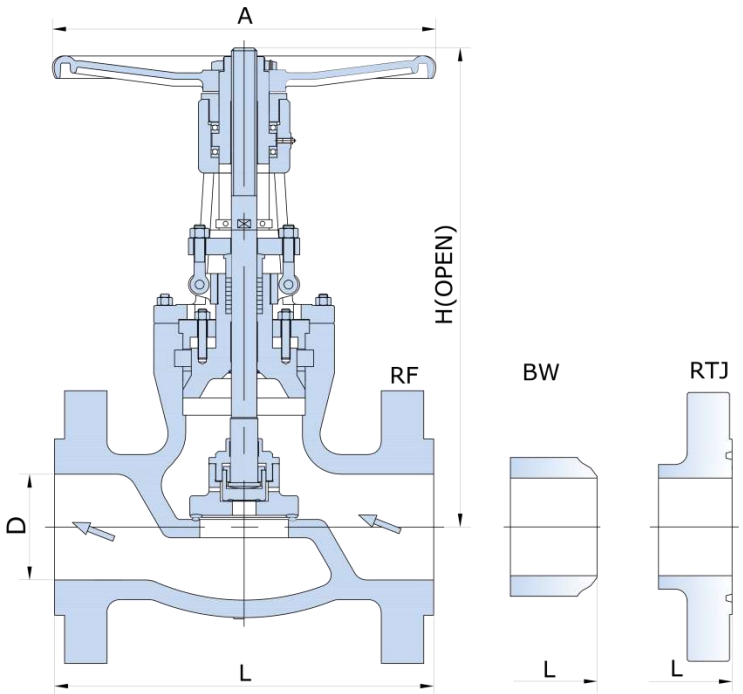

ASME CLASS 2500 (PN 420)

Size *in/mm*	D	L			H	W	Weight
		RF	RTJ	BW			RF/RTJ *(lb/kg)*
2 *50*	*1.5* *38*	17.75 *451*	17.88 *454*	*11* *279*	*19.5* *495*	*13.78* *350*	*258/163* *117/74*
2 ½ *65*	*1.89* *48*	20.32 *508*	20.56 *514*	*13* *330*	*21.65* *550*	*17.72* *450*	*341/286* *155/130*
3 *80*	*2.24* *57*	22.75 *578*	23 *584*	*14.5* *368*	*23.74* *603*	*17.72* *450*	*430/251* *195/114*
4 *100*	*2.87* *73*	26.5 *673*	26.88 *683*	*18* *457*	*26.97* *685*	*19.69* *500*	*573/441* *260/200*
5 *125*	*3.62* *92*	31.26 *794*	31.77 *807*	*521* *33*	*33.46* *850*	*23.62* *600*	*1674/1167* *760/530*
6 *150*	*4.37* *111*	36 *914*	36.5 *927*	*24* *610*	*38.23* *971*	*23.62* *600*	*2737/1689* *1238/767*
8 *200*	*5.75* *146*	40.25 *1022*	40.88 *1038*	*30* *762*	*43.31* *1100*	-	-
10 *250*	*7.27* *184*	50 *1270*	50.88 *1292*	*36* *914*	*47.24* *1200*	-	-
12 *300*	*8.62* *219*	56 *1422*	56.88 *1444*	*41* *1041*	*60* *1524*	-	-

The dimension and weights are for reference only and subject to change without notice.

1. For more dimensional information, please contact our sales representative.
2. “W” on above schematic is the diameter for hand wheel, the one without dimension on the table above is defaulted by gear operation.

GLOBE VALVE

VALVE FIGURE NUMBER — *HOW TO ORDER*

	Nominal Size	Valve Type	Pressure Rating	End Conn.	Construct-ion	Body Material	Trim Material	Seat	O-ring	Operation Mode
	A	B	C	D	E	F	G	H	I	J
e.g.	0 8	G L	6	R	1	C 4	0 5	N	0	G

NPS 8 Class 600,Globe Valve, Straight pattern, Bolt bonnet, Raised Face, WCB body, Trim 5#, Non Renewable Seat, No O-ring, GearOperated.

A Nominal Size

00	Special	**02**	2 (DN 50)	**07**	8 RB	**19**	20 RB	**31**	32 RB
F1	3/8 (DN 10)	**R2**	2 RB	**08**	8 (DN 200)	**20**	20 (DN 500)	**32**	32 (DN 800)
F2	1/2 (DN 15)	**F6**	2 ½ (DN 65)	**09**	10 RB	**21**	22 RB	**33**	34 RB
0R	1/2 RB	**3R**	2 ½ RB	**10**	10 (DN 250)	**22**	22 (DN 550)	**34**	34 (DN 850)
F3	3/4 (DN 20)	**03**	3 (DN 80)	**11**	12 RB	**23**	24 RB	**35**	36 RB
R0	3/4 RB	**R3**	3 RB	**12**	12 (DN 300	**24**	24 (DN 600)	**36**	36 (DN 900)
01	1 (DN 25)	**04**	4 (DN 100)	**13**	14 RB	**25**	26 RB	**37**	38 RB
R1	1 RB	**R4**	4 RB	**14**	14 (DN 350)	**26**	26 (DN 650)	**38**	38 (DN 950)
F4	1 ¼ (DN 32)	**05**	5 (DN 125)	**15**	16 RB	**27**	28 RB	**39**	40 RB
1R	1 ¼ RB	**R5**	5 RB	**16**	16 (DN 400)	**28**	28 (DN 700)	**40**	40 (DN 1000)
F5	1 ½ (DN 40)	**06**	6 (DN 150)	**17**	18 RB	**29**	30 RB	**41**	42 RB
2R	1 ½ RB	**R6**	6 RB	**18**	18 (DN 450)	**30**	30 (DN 750)	**...**	More as such

B Valve Type

GA	Gate Valve
GL	Globe Valve
CH	Check Valve

C Pressure Rating

0	Special	**7**	Class 2500
1	Class 150	**9**	Class 900
3	Class 300	**8**	Class 800
5	Class 1500	**2**	Class 125(PN16)
6	Class 600	**4**	Class 400(PN64)

D End Connection

X	Special	**B**	Butt-Weld (BW)
R	RF Flanged	**S**	Socket-Weld (SW)
J	RTJ Flanged	**W**	Wafer
F	FF Flanged	**L**	Lug
T	Threaded		

E Construction

GL

1	Straight pattern, Bolt bonnet
2	Straight pattern, Welded Bonnet
3	Straight pattern, Pressure Seal
4	Y- pattern, Bolt bonnet
5	Y- pattern, Welded Bonnet
6	Y- pattern, Pressure Seal

F Body Material

X0	Special	**M9**	A182 F22 CL 3	**L5**	A350 LF3	**S6**	A351 CF8M
C1	A105	**M0**	A217 WC9	**L6**	A352 LC3	**S7**	A182 F316L
C2	A216 WCA	**E1**	A182 F5	**L7**	A350 LF5	**S8**	A351 CF3M
C4	A216 WCB	**E2**	A217 C5	**L8**	A352 LCB	**S9**	A182 F347
C6	A216 WCC	**E4**	A217 C6	**L9**	A350 LF6	**S0**	A351 CF8C
M1	A182 F1	**E5**	A182 F9	**LA**	A350 LF9	**D1**	A182 F51
M2	A217 WC1	**E6**	A217 C12	**LB**	A352 LC9	**D2**	A995 4A
M3	A182 F2	**E7**	A182 F91	**LD**	A352 LCC	**D3**	A182 F53
M4	A217 WC4	**E8**	A217 C12A	**S1**	A182 F304	**D4**	A995 5A
M5	A182 F12 CL 2	**L1**	A350 LF1	**S2**	A351 CF8	**D5**	A182 F55
M6	A217 WC5	**L2**	A352 LCA	**S3**	A182 F304L	**D6**	A995 6A
M7	A182 F11 CL 2	**L3**	A350 LF2	**S4**	A351 CF3		
M8	A217 WC6	**L4**	A352 LC2	**S5**	A182 F316		

G Trim Material

00	Special	**08**	13Cr/Stellite /13Cr	**16**	Stellite /Stellite /316	**25**	F53 /F53 /F53
01	13Cr/13Cr/13Cr	**09**	Monel/Monel /Monel	**17**	Stellite /Stellite /347	**32**	316L /Stellite /316L
02	304/304/304	**10**	316/316/316	**18**	Stellite /Stellite /Alloy 20	**33**	Stellite /Stellite /316L
03	310/310/310	**11**	Monel/Stellite/Monel	**20**	304L /304L /304L	**34**	304L /Stellite /304L
04	Hard 13Cr/Hard 13Cr/13Cr	**12**	316/Stellite/316	**21**	316L /316L /316L	**35**	Stellite /Stellite /304L
05	Stellite /Stellite /13Cr	**13**	Alloy 20/Alloy 20 /Alloy 20	**22**	321 /321 /321		
06	13Cr/Cu-Ni/13Cr	**14**	Alloy 20/Stellite /Alloy 20	**23**	F55 /F55/F55		
07	13Cr/Hard 13Cr /13Cr	**15**	Stellite /Stellite /304	**24**	F51/F51 /F51		

VALVE FIGURE NUMBER

HOW TO ORDER

	Nominal Size	Valve Type	Pressure Rating	End Conn.	Construct-ion	Body Material	Trim Material	Seat	O-ring	Operation Mode
	A	B	C	D	E	F	G	H	I	J
e.g.	0 6	G A	6	R	1	C 4	0 5	R	0	H

NPS 8 Class 600,Globe Valve, Straight pattern, Bolt bonnet, Raised Face, WCB body, Trim 5#, Non Renewable Seat, No O-ring, GearOperated.

H Seat

- **H** HNBR
- **E** EPDM
- **V** VITON
- **B** BUNA
- **R** Renewable Metal
- N Non Renewable Metal

I O-Ring

- **0** None
- **1** Viton
- **2** Teflon
- **3** HNBR
- **4** NBR
- **5** Special
- **6** EPDM
- **7** FVMQ
- **8** FFKM
- **9** AFLAS

J Operation

- **B** Bare Stem
- **L** Lever
- **G** Gearbox
- **P** Pneumatic
- **E** Electric
- **C** Gear w/ Chain
- N Pneumatic-Hydraulic
- **S** Solid Lever
- **D** Lever with locking device
- **R** Solid lever with locking device

HOW THE FIGURE NUMBER SYSTEM WORKS

Introduction. Figure number system uses a code consisting 14 digits of letters and numbers to represent the specification of a valve of certain specification. Of 14 digits, they are separated into 10 groups identified by letters from A to J. Each group represents a parameter of a valve, together they contain almost all the essential parameters of the valve.

Uses. To use the figure number system to generate a code is easy. Under each group, the code is shown on the left while on the right is the meaning of the code. Start by selecting a code from group A, through group J. If the specification of the valve is not listed, select the code for "Special ". The total length of the figure number shall be exactly 14 digits.

Cautions. It is advised that you have as detailed the specification as possible to generate a figure number, which means eliminating "Specials". If you don't have enough specification or information about the valve you are ordering, or you're not sure how to use the system to generate a figure number, contact one of our sales representatives for help.

Note: ERREESSE reserves the right to make any modifications without notice.

Offshore

Pipeline

ERREESSE

Onshore

Refinery

IMPORTANT NOTICE

- All dimensions in inches not listed in standards are converted from millimeters. Weights in lbs (pounds) are converted from kilograms.
- Data listed in the catalog, including dimensions, weights, specifications and other valve related data are intended to provide general information and guidance only.

ERREESSE Valve GmbH

Berlin Kreuz Berg District ÿ Germany T +49 303 1879831 www.erreesse.de

F +49 303 1879834 E info@erreesse.de